# EJB

- Zone 1, 2, 21, 22
- Group IIB+$H_2$
- Aluminium junction boxes
- IP 66 / 67

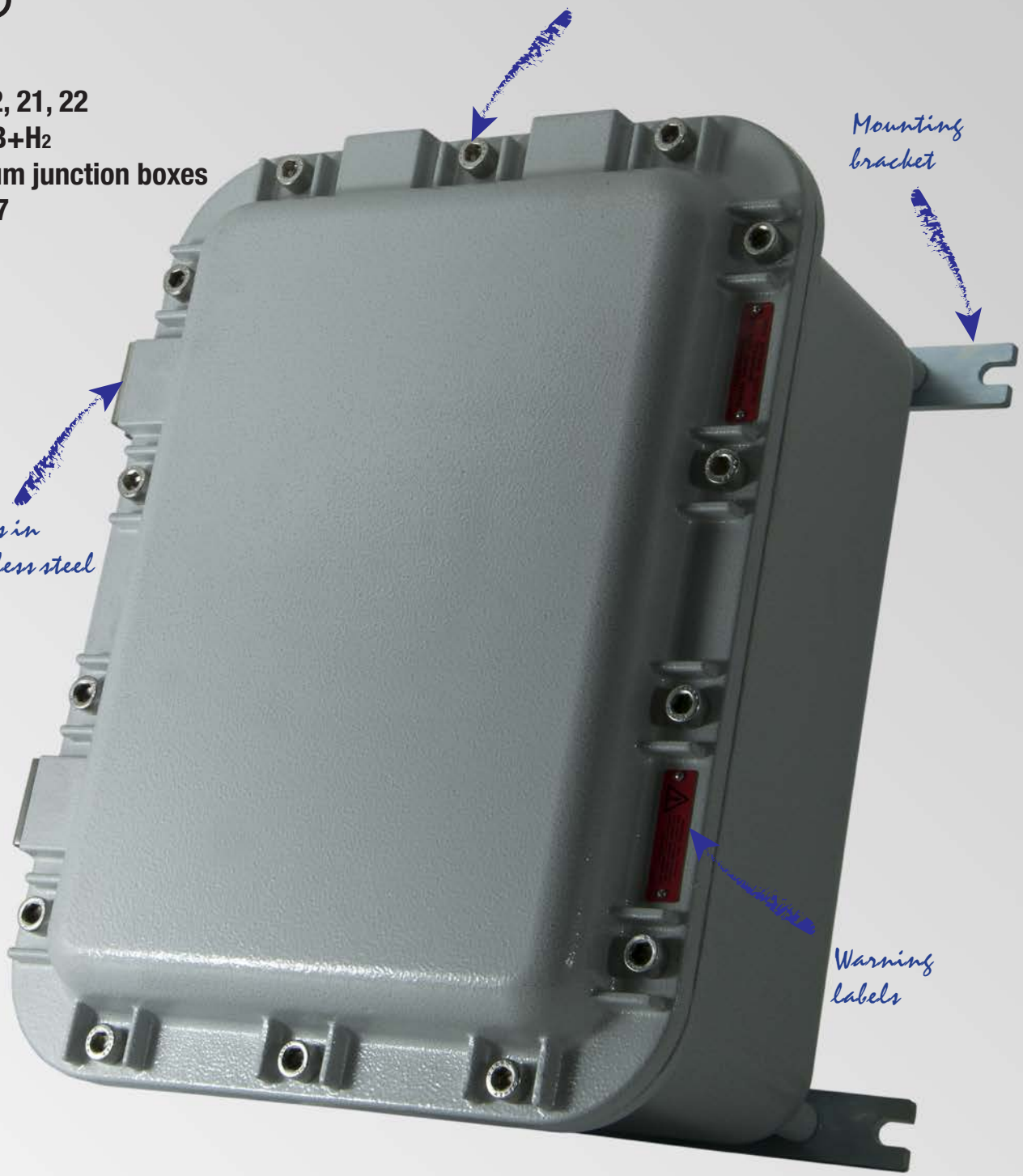


Silicone gasket between body and lid

External earth screw in body

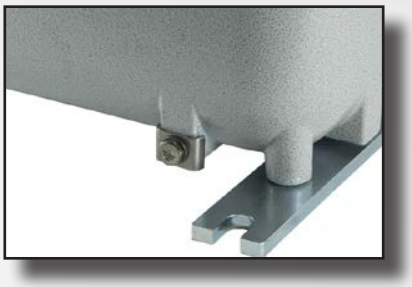

Internal earth screw in body

# EJB-... series Aluminium junction boxes gas group IIB+$H_2$

EJB series junction boxes are suitable for installation in any areas of a plant where there is a risk of explosion and/or fire, or areas where combustible dust is present, classified as Zone 1, 2, 21, 22. The quality of this product is recognized and valued the world over for its specific aluminium alloy and the mechanical property of its finishes. The EJB series is mostly used as a box to carry terminals and busbars, fuse carriers, transformers, reactors and barriers, though it is also used to produce control and signalling boards, light and power boards and surge arresters, and motor starter boxes with various configurations, which are custom made to the requirements of our customers worldwide.

Cortem Group labels its products with a non-removable adhesive label featuring a hologram and an alphanumerical univocal code, as a safety measure against the illegal sale of fakes so that all the products are guaranteed as original. Non-compliance with the International standards entails serious risks for the environment, especially for those working daily on the plants.

**Application sectors:**

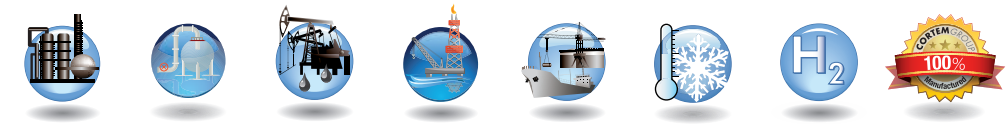


Oil refineries | Chemical and petrochemical plants | Onshore plants | Offshore plants | Oil loading/ offloading wharfs | Low temperatures | Presence of hydrogen | 100% Cortem product

## CERTIFICATION DATA FOR EMPTY ENCLOSURES

| | | | | |
|---|---|---|---|---|
| **Classification:** | Group II | Category 2GD | | |
| **Installation:** EN 60079.14 | zone 1 - zone 2 (Gas) | zone 21 - zone 22 (Dust) | | |
| **Marking:** | CE 0722 Ex II 2 GD - Ex db IIB+$H_2$ Gb - Ex tb IIIC Db - IP66/67 | | | |
| **Certification:** | ATEX CESI 00 ATEX 036U | | | |
| | ATEX FIDI 25 ATEX 0001U (EJBX-6BB) | | | |
| | IEC Ex CES 14.0017U | All IEC Ex, ECASEx, UKEX, TR CU and INMETRO certification data can be downloaded from www.cortemgroup.com | | |
| | IEC Ex FIDI 25.0003U (EJBX-6BB) | | | |
| | UKEX AVAILABLE | | | |
| | ECASEx AVAILABLE | | | |
| | INMETRO DNV 16.0099U | | | |
| | TR CU AVAILABLE | | | |
| **Standards:** | CENELEC EN 60079-0: 2018, EN 60079-1: 2014, EN 60079-31: 2014, EN 60529: 1991 and EUROPEAN DIRECTIVE 2014/34/UE | | | |
| **Ambient Temp.:** | -60°C +70°C | With boxes complete with polycarbonate indicator on lid Ta -40°C +70°C. | | |
| | -60°C +100°C | On request only for EJB enclosures without accessories and control and signalling devices (except EJB-01 and AQS-1 versions). | | |
| | -60°C (Use indicator light series M-0457**AL**, M-0457**AL**/3, M-0457**IN** or M-0457**IN**/3) | | | |
| **Degree of protection:** | IP66/67 | For enclosures without control and signalling devices | | |
| | IP66 | For enclosures with Cortem M-0...-series control and signalling devices | | |

**This equipment can be used in an environment containing explosive atmosphere and with the presence of hydrogen.**

## CERTIFICATION DATA FOR ENCLOSURES WITH TERMINALS

| | | | |
|---|---|---|---|
| **Classification:** | Group II | Category 2GD | |
| **Installation:** EN 60079.14 | zone 1 - zone 2 (Gas) | zone 21 - zone 22 (Dust) | |
| **Marking:** | CE 0722 Ex II 2 GD - Ex db IIB+$H_2$ T... Gb - Ex tb IIIC T...°C Db - IP66/67 | | |
| **Certification:** | ATEX CESI 01 ATEX 027X | | |
| | IEC Ex CES 16.0012X | All IEC Ex and ECASEx certification data can be downloaded from www.cortemgroup.com | |
| | ECASEx AVAILABLE | | |
| **Standards:** | CENELEC EN 60079-0: 2012+A11:2013, EN 60079-1: 2014, EN 60079-31: 2014, EN 60529: 1991 and EUROPEAN DIRECTIVE 2014/34/UE | | |
| **Ambient Temp.:** | -20°C (-60°C) +40°C | With temperature class T6 and maximum surface temperature T85°C. | |
| | -20°C (-60°C) +55°C | With temperature class T5 and maximum surface temperature T100°C. | |
| **Degree of protection:** | IP66/67 | | |

## CERTIFICATION DATA OF ENCLOSURES FOR CONTROL, MONITORING AND SIGNALLING UNITS

| | | | |
|---|---|---|---|
| **Classification:** | Group II | Category 2GD | |
| **Installation:** EN 60079.14 | zone 1 - zone 2 (Gas) | zone 21 - zone 22 (Dust) | |
| **Marking:** | CE 0722 Ex II 2 GD - Ex db IIB+$H_2$ T... Gb - Ex tb IIIC T...°C Db - IP66/67 | | |
| **Certification:** | ATEX CESI 01 ATEX 027X | | |
| | ATEX FIDI 25 ATEX 0002U (EJBX-6BB) | | |
| | IEC Ex CES 16.0012X | All IEC Ex, ECASEx, INMETRO, CCC and TR CU certification data can be downloaded from www.cortemgroup.com | |
| | IEC Ex FIDI 25.0004U (EJBX-6BB) | | |
| | ECASEx AVAILABLE | | |
| | INMETRO DNV 23.0313X | | |
| | CCC AVAILABLE | | |
| **Standards:** | CENELEC EN 60079-0: 2012, EN 60079-1: 2014, EN 60079-31: 2014, EN 60529: 1991 and EUROPEAN DIRECTIVE 2014/34/UE | | |
| **Ambient Temp.:** | -20°C +40°C | With temperature class T6 and maximum surface temperature T85°C. | |
| | -20°C +55°C/+70°C | With temperature class T5, T4 and maximum surface temperature T100°C, T134°C. | |
| | -60°C on request. (Use indicator light series M-0457**AL**, M-0457**AL**/3, M-0457**IN** or M-0457**IN**/3) | | |
| **Degree of protection:** | IP66/67 | For enclosures without control and signalling devices | |
| | IP66 | For enclosures with Cortem M-0...-series control gear | |

## CERTIFICATION DATA OF ENCLOSURES SERVING INTERFACE UNIT CONTROL AND MONITORING FUNCTION

| | | | | |
|---|---|---|---|---|
| **Classification:** | Group II | Category 2GD | | |
| **Installation:** EN 60079.14 | zone 1 - zone 2 (Gas) | zone 21 - zone 22 (Dust) | | |
| **Marking:** | CE 0722 Ex II2(1)GD - Ex db [ia Ga] IIB+$H_2$ T... Gb - Ex tb IIIC T...°C Db - IP66/67 | | | |
| **Certification:** | ATEX CESI 02 ATEX 073X | | | |
| | IEC Ex CES 16.0014X | All IEC Ex, ECASEx certification data can be downloaded from www.cortemgroup.com | | |
| | ECASEx AVAILABLE | | | |
| **Standards:** | CENELEC EN 60079-0: 2009, EN 60079-1: 2007, EN 60079-11: 2011, EN 60079-26: 2007, EN 60079-31: 2009, EN 60079-0:2018, EN 60439-1, EN 60529 and EUROPEAN DIRECTIVE 2014/34/UE | | | |
| **Ambient Temp.:** | -20°C +40°C | With temperature class T6 and maximum surface temperature T85°C. | | |
| | -20°C +55°C/+70°C | With temperature class T5 and maximum surface temperature T100°C. | | |
| | -60°C on request. (Use indicator light series M-0457**AL**, M-0457**AL**/3, M-0457**IN** or M-0457**IN**/3) | | | |
| **Degree of protection:** | IP66/67 | For enclosures without control and signalling devices | | |

## OTHER AVAILABLE CERTIFICATES (please contact the sales department for further information)

EXTENSION n° 07/12 to EC-type examination certificate CESI 01 ATEX 027
Equipment: EJB-series control, monitoring and signalling units
EJB-55B enclosures with PDTrac partial discharge monitoring units

EXTENSION n° 04/08 to EC-type examination certificate CESI 01 ATEX 027
Equipment: EJB-series control, monitoring and signalling units
EJB-6 enclosures with RX and IBUC units

CESI 07 ATEX 047 CERTIFICATE
EJB..AD and MU..AD switchgear
Enclosures made from cast iron

CESI 11 ATEX 037 CERTIFICATE
EJB-45 with actuators. "Hook release controller" for simultaneous release of hooks
The actuators control 1,2 or 3 push-pull controls that are fed out of the enclosure through certified RRC-01 bushes

EXTENSION n° 07/12 to EC-type examination certificate CESI 01 ATEX 027
Equipment: EJB-series control, monitoring and signalling units
New type of equipment named Surge Protection Device has been added

# EJB-... series Aluminium junction boxes gas group IIB+$H_2$

## MECHANICAL FEATURES

| | |
|---|---|
| **Body and lid:** | Low copper content aluminium alloy |
| **Hinges:** | Cast (except for EJB-01), stainless steel for new models |
| **Lid handle:** | Made of black painted steel for EJB-6/6B/EJB-6BB and EJB-7/7B models (see below).<br>Made of black painted plastic for EJB-55/55B models |
| **Gasket:** | Acid, hydrocarbon and high temperature-resistant silicone, located between body and lid |
| **Certification label:** | Adhesive label located inside on empty enclosures; aluminium label riveted onto lid on other versions |
| **Bolts and screws:** | Stainless steel |
| **Earth screws:** | M6 stainless steel. On inside and outside of body and on lid complete with anti-rotation brackets |
| **Mounting brackets:** | Electrogalvanized steel (cast aluminium feet for AQS-1) |
| **Coating:** | Polyester coating RAL 7035 (Light grey) |
| **Corrosion Resistance:** | The STANDARD of the aluminium alloy used by Cortem has passed the tests required by standards EN 60068-2-30 (hot/humid cycles) and EN 60068-2-11 (salt mist tests) |

**Lid featuring Cortem easy-close system.**

For EJB-6/6B/6BB and EJB-7/7B junction boxes, the opening and closing of the cover is facilitated by the presence of an even more sturdy handle, able to offer a greater safety of use for the operator. It is made of stainless steel AISI 316L, which, after a blasting process, is coated with a matt black powder (RAL 9005) coating that ensures pleasing aesthetics and a high resistance to physical impact and corrosion in saline environments.

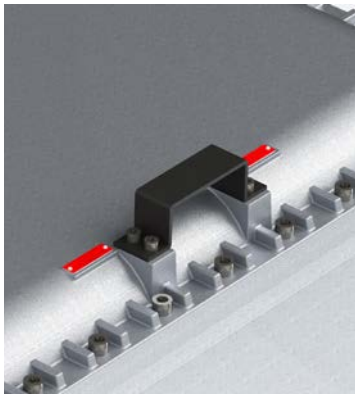

## ACCESSORIES AVAILABLE ON REQUEST/ SPECIAL REQUESTS

Internal anti-condensation coating RAL 2004 (pure orange)
External polyester coating in different colour (specify the RAL number)
Breather valve Code ECD-210S or drain valve Code ECD-210S
Round or rectangular windows on lid (see section Enclosures with windows for inspection and reading instruments)
Hinges for enclosures EJB-01 Code K-0351
Internal mounting plate: 2.5mm-thick aluminium (code BFE-...). See accessories section
2.5mm-thick electrogalvanized steel (code BFE-...AC).

Thread options:
- NPT threads ANSI B1.20.1
- GAS UNI ISO 7-1 thread
- Metric threads ISO 261/965

Hinges on the short side (only for new models) example cod. EJB.5B**S**

Cortem manufactures any type of custom-made products according to customer specifications and in compliance with the certification data.

# EJB-... series Aluminium junction boxes gas group IIB+$H_2$

Cortem is introducing a new model of EJB enclosures that will replace the entire range. This new series will be provided with new stainless steel hinges and a new lid that will allow more flexibility in the supply of the product. Cortem will then be able to offer the best solution to customer needs.

## SELECTION CHART FOR ENCLOSURES WITH RIBBED LIDS

| Code | Outside dimensions | | | Inside dimensions | | | | Mounting | | | Mounting with brackets | | | Weight |
|---|---|---|---|---|---|---|---|---|---|---|---|---|---|---|
| | A | B | C | a | b | c | s1 | d | e | f | D | E | F | kg |
| EJB-1 | 304 | 204 | 218 | 240 | 140 | 160 | 14 | 230 | 130 | M8 | 230 | 210 | 9 | 9,4 |
| EJB-2 | 424 | 224 | 218 | 360 | 160 | 159 | 14 | 350 | 150 | M8 | 350 | 230 | 9 | 13,6 |
| EJB-3 | 364 | 284 | 278 | 300 | 220 | 214 | 14 | 290 | 210 | M8 | 290 | 290 | 9 | 17 |
| EJB-3B | 364 | 284 | 218 | 300 | 220 | 154 | 14 | 290 | 210 | M8 | 290 | 290 | 9 | 14,2 |
| * EJB-7 | 1000 | 700 | 500 | 890 | 590 | 340 | 30 | 810 | 510 | M16 | 810 | 655 | 18 | 248 |
| * EJB-7B | 1000 | 700 | 400 | 890 | 590 | 240 | 30 | 810 | 510 | M16 | 810 | 655 | 18 | 210 |
| AQS-1 | 500 | 450 | 207 | 430 | 380 | 127 | 15 | 420 | 300 | M12 | - | - | - | 31,5 |

* New model.

Dimensions in mm

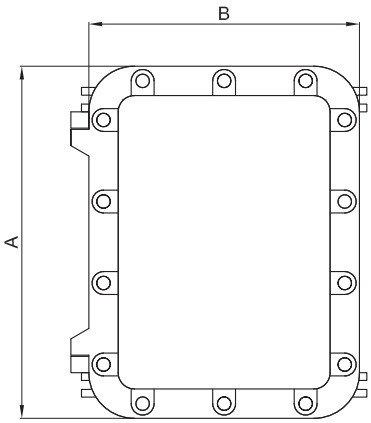


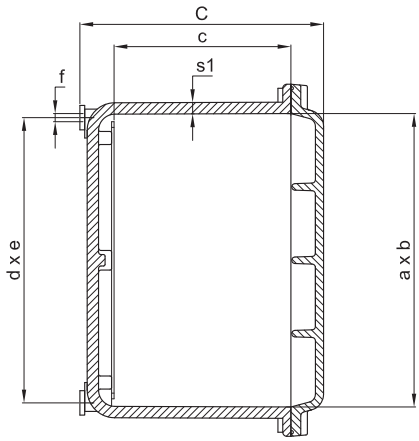


**EJB-7 detail**

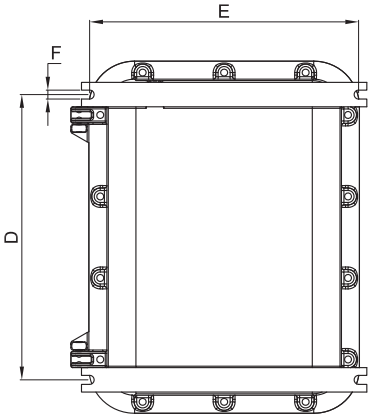


**Detail of box AQS-1**

The AQS-1 series junction boxes have been designed to contain distribution terminal blocks and control switches.
Its particular compactness and the inward flange makes them ideal for all those applications in which it is necessary to realize control panels of small dimensions with the possibility of installing modular switches side by side with different types of poles and amperage. The standard hinged lid and silicone gasket make this junction box a qualitative, economical and compact choice.

# EJB-... series Aluminium junction boxes gas group IIB+$H_2$

Aluminium enclosures with solid lids are used when there is a need to install a greater number of control and signalling devices than can be accommodated on the same enclosure with a ribbed lid or when handles need to be installed in certain positions on the lid.

## SELECTION CHART FOR ENCLOSURES WITH SOLID LIDS

| Code | Outside dimensions | | | Internal dimensions | | | | Mounting | | | Mounting with brackets | | | Weight |
|---|---|---|---|---|---|---|---|---|---|---|---|---|---|---|
| | A | B | C | a | b | c | s1 | d | e | f | D | E | F | kg |
| EJB-01 | 282 | 182 | 105 | 214 | 113 | 60 | 14 | 160 | 123 | M6 | 160 | 154 | 9 | 5,6 |
| EJB-1A | 304 | 204 | 218 | 240 | 140 | 153 | 14 | 230 | 130 | M8 | 230 | 210 | 9 | 10,3 |
| EJB-2A | 424 | 224 | 218 | 360 | 160 | 153 | 14 | 350 | 150 | M8 | 350 | 230 | 9 | 15,4 |
| EJB-3A | 364 | 284 | 278 | 300 | 220 | 213 | 14 | 290 | 210 | M8 | 290 | 290 | 9 | 19,4 |
| EJB-3BA | 364 | 284 | 218 | 300 | 220 | 153 | 14 | 290 | 210 | M8 | 290 | 290 | 9 | 16,4 |
| * EJB-4 | 432 | 332 | 299 | 360 | 260 | 237 | 14 | 350 | 250 | M10 | 350 | 330 | 11 | 25,4 |
| * EJB-4B | 432 | 332 | 229 | 360 | 260 | 167 | 14 | 350 | 250 | M10 | 350 | 330 | 11 | 21,4 |
| * EJB-45 | 567 | 387 | 298 | 490 | 305 | 229 | 14 | 360 | 236 | M10 | 360 | 356 | 11 | 38,9 |
| * EJB-45B | 567 | 387 | 248 | 490 | 305 | 179 | 14 | 360 | 236 | M10 | 360 | 356 | 11 | 35,3 |
| *EJB-48BA | 507 | 432 | 271 | 435 | 360 | 203 | 16 | 350 | 425 | M10 | 425 | 430 | 11 | 37,5 |
| * EJB-5 | 632 | 432 | 341 | 560 | 360 | 275 | 16 | 350 | 550 | M10 | 550 | 430 | 11 | 51 |
| * EJB-5B | 632 | 432 | 271 | 560 | 360 | 205 | 16 | 350 | 550 | M10 | 550 | 430 | 11 | 43,4 |
| * EJB-503 | 632 | 432 | 397 | 560 | 360 | 330 | 16 | 350 | 550 | M10 | 550 | 430 | 11 | 59,2 |
| EJB-55 | 710 | 510 | 356 | 630 | 430 | 273 | 17 | 600 | 400 | M10 | 600 | 490 | 11 | 81,3 |
| EJB-55B | 710 | 510 | 256 | 630 | 430 | 173 | 20 | 600 | 400 | M10 | 600 | 490 | 11 | 66,9 |
| * EJB-6 | 870 | 650 | 478 | 760 | 540 | 369 | 28 | 680 | 460 | M16 | 680 | 580 | 14 | 158,4 |
| * EJB-6B | 870 | 650 | 373 | 760 | 540 | 253 | 28 | 680 | 460 | M16 | 680 | 580 | 14 | 138,5 |
| * EJB-6BB | 870 | 650 | 313 | 760 | 540 | 209 | 23 | 680 | 460 | M16 | 680 | 580 | 14 | 112,5 |

* New model

Dimensions in mm

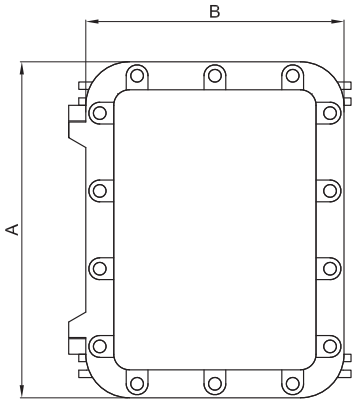


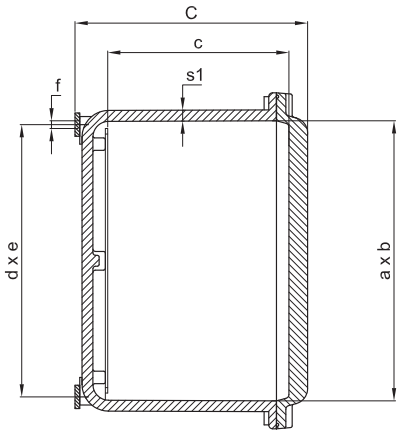


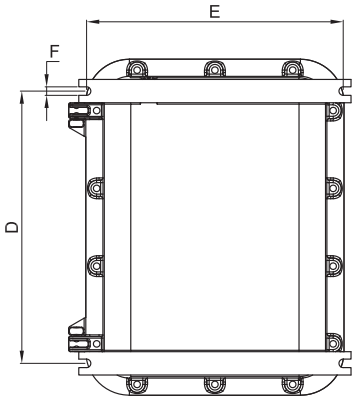


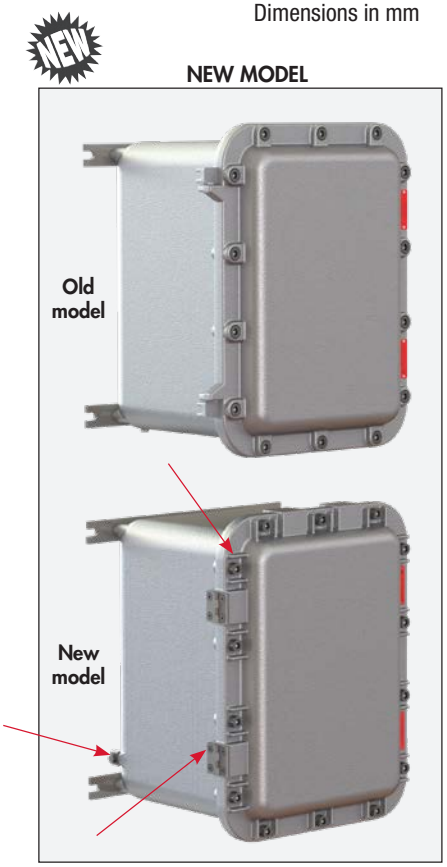

| THREAD COMPARISON CHART | | | | | | | | | |
|---|---|---|---|---|---|---|---|---|---|
| ISO 7-1 | 1/2" | 3/4" | 1" | 1 1/4" | 1 1/2" | 2" | 2 1/2" | 3" | 4" |
| ANSI B.20.1 NPT | 1/2" | 3/4" | 1" | 1 1/4" | 1 1/2" | 2" | (*) | (*) | (*) |
| ISO 261/965 | 20x1.5 | 25x1.5 | 32x1.5 | 40x1.5 | 50x1.5 | 63x1.5 | 75x1.5 | 90x1,5 | 100x1,5 |
| **D** Thread diameter | **1** | **2** | **3** | **4** | **5** | **6** | **7** | **8** | **10** |

As required by the current standard, holes can be drilled by Cortem or by authorized partners who hold a production notification in accordance with ATEX Directive .

| TYPE OF ENCLOSURE | HOLE DRILLING IN BODY | | | | | | | | | | | | | | | | | | | |
|---|---|---|---|---|---|---|---|---|---|---|---|---|---|---|---|---|---|---|---|---|
| | Sides A and C | | | | | | | | | | Sides B and D | | | | | | | | | |
| | Drilling area mm | MAXIMUM QUANTITY PER HOLE TYPE | | | | | | | | | Drilling area mm | MAXIMUM QUANTITY PER HOLE TYPE | | | | | | | | |
| | | 1 | 2 | 3 | 4 | 5 | 6 | 7 | 8 | 10 | | 1 | 2 | 3 | 4 | 5 | 6 | 7 | 8 | 10 |
| **EJB-1** | 100x120 | 6 | 4 | 4 | 2 | 2 | 1 | 1 | 1 | - | 200x120 | 12 | 8 | 6 | 6 | 4 | 2 | 2 | 1 | 1 |
| **EJB-2** | 120x120 | 6 | 4 | 4 | 4 | 2 | 1 | 1 | 1 | 1 | 320x120 | 18 | 12 | 10 | 9 | 8 | 4 | 3 | 2 | 2 |
| **EJB-3** | 180x180 | 16 | 12 | 9 | 6 | 4 | 4 | 3 | 2 | 1 | 260x180 | 20 | 15 | 12 | 9 | 6 | 6 | 4 | 3 | 2 |
| **EJB-3B** | 180x120 | 11 | 6 | 6 | 5 | 4 | 2 | 2 | 1 | 1 | 260x120 | 15 | 10 | 8 | 8 | 6 | 3 | 2 | 2 | 2 |
| **EJB-4** | 220x195 | 16 | 16 | 9 | 9 | 8 | 4 | 4 | 3 | 1 | 320x195 | 24 | 24 | 15 | 12 | 12 | 6 | 6 | 4 | 2 |
| **EJB-4B** | 220x130 | 12 | 8 | 6 | 6 | 6 | 3 | 2 | 2 | 1 | 320x130 | 18 | 12 | 10 | 8 | 8 | 5 | 3 | 2 | 2 |
| **EJB-45** | 277x190 | 24 | 18 | 12 | 12 | 9 | 6 | 5 | 4 | 2 | 448x190 | 36 | 30 | 21 | 18 | 17 | 10 | 8 | 6 | 3 |
| **EJB-45B** | 277x135 | 17 | 8 | 6 | 6 | 6 | 3 | 2 | 2 | 1 | 448x135 | 27 | 12 | 10 | 8 | 8 | 5 | 3 | 2 | 2 |
| **EJB-48BA** | 300x150 | 24 | 15 | 14 | 8 | 8 | 3 | 3 | 2 | 2 | 375x150 | 30 | 20 | 17 | 10 | 10 | 4 | 3 | 3 | 3 |
| **EJB-5** | 320x230 | 30 | 28 | 20 | 16 | 12 | 9 | 6 | 4 | 3 | 520x230 | 50 | 45 | 32 | 28 | 18 | 15 | 10 | 8 | 5 |
| **EJB-5B** | 320x160 | 24 | 18 | 15 | 8 | 8 | 6 | 3 | 3 | 2 | 520x160 | 40 | 27 | 24 | 14 | 12 | 10 | 5 | 4 | 3 |
| **EJB-55** | 400x195 | 32 | 28 | 18 | 15 | 14 | 8 | 6 | 3 | 2 | 600x195 | 44 | 40 | 27 | 23 | 21 | 12 | 10 | 5 | 4 |
| **EJB-55B** | 400x95 | 16 | 13 | 11 | 5 | 5 | 4 | 3 | 3 | - | 600x95 | 24 | 20 | 17 | 8 | 7 | 6 | 5 | 5 | - |
| **EJB-6** | 480x260 | 50 | 45 | 38 | 28 | 24 | 15 | 12 | 8 | 6 | 700x260 | 70 | 60 | 55 | 40 | 34 | 24 | 18 | 12 | 10 |
| **EJB-6B** | 480x160 | 38 | 27 | 23 | 14 | 12 | 10 | 7 | 4 | 3 | 700x160 | 54 | 38 | 33 | 20 | 18 | 16 | 9 | 6 | 5 |
| **EJB-6BB** | 470x110 | 27 | 16 | 14 | 12 | 6 | 5 | 4 | 4 | 3 | 690x110 | 41 | 24 | 20 | 19 | 9 | 8 | 6 | 5 | 5 |
| **EJB-7** | 530x280 | 66 | 45 | 40 | 28 | 24 | 15 | 12 | 8 | 6 | 830x280 | 96 | 75 | 63 | 44 | 37 | 24 | 18 | 12 | 10 |
| **EJB-7B** | 530x180 | 40 | 36 | 23 | 20 | 12 | 10 | 4 | 4 | 3 | 830x180 | 62 | 56 | 36 | 32 | 19 | 17 | 7 | 6 | 5 |
| **AQS-1** | 400x70 | 10 | 9 | 8 | 4 | 3 | 3 | 2 | - | - | 400x70 | 17 | 15 | 13 | 6 | 6 | 5 | 4 | - | - |
| **EJB-01** | 100x40 | 2 | 1 | 1 | - | - | - | - | - | - | 200x40 | 4 | 4 | 3 | - | - | - | - | - | - |

(*) 2 1/2" - 3" - 4" NPT holes can be drilled only on EJB-55…, EJB-6… and EJB-7…

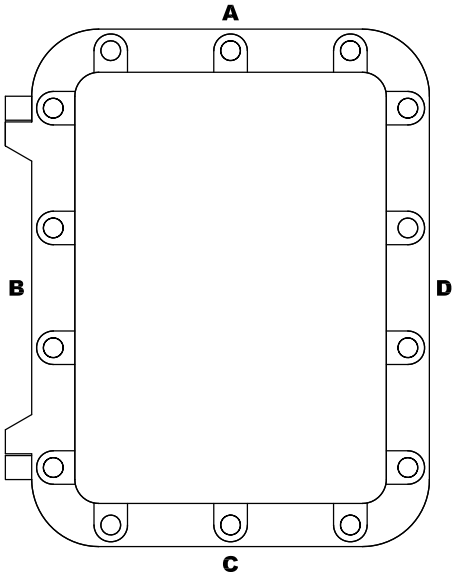


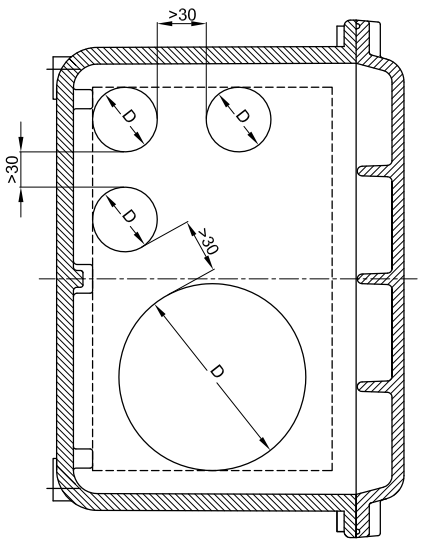

# EJB-... series Lid drilling data

| THREAD COMPARISON CHART | | | | | | | | |
|---|---|---|---|---|---|---|---|---|
| D1 | ISO 228 | G 3/8" | G 1/2" | G 3/4" | - | - | - | - |
| | ISO 261/965 | M16x1.5 | M20x1.5 | M25x1.5 | M32x1.5 | M35x1.5 | M40x1.5 | M42x1.5 |

| TYPE OF ENCLOSURE | HOLE DRILLING IN LID | |
|---|---|---|
| | Max. n°. of holes allowed for ribbed lids | Max. n°. of holes allowed for solid lids |
| EJB-1 | 4 | 6 |
| EJB-2 | 8 | 10 |
| EJB-3 | 8 | 12 |
| EJB-4 | - | 15 |
| EJB-45 | - | 28 |
| EJB-5 | - | 40 |
| EJB-55 | - | 54 |
| EJB-6 | - | 60 |
| EJB-7 | 60 | - |
| EJB-01 | - | 6<br>(Only ISO 261/965 holes are possible on EJB-01) |
| AQS-1 | 24 | - |

**Notes:**

- The standard featured is for illustrative purposes only since it has been designed exclusively for M42 holes.
- Standard holes refer to mounting of Cortem control and signalling devices.
- 3/8" Ø holes for Cortem std. side-mounted handles centre-to-centre distance >70mm.
- 1/2" Ø holes for Cortem std. heavy-duty series side-mounted handles centre-to-centre distance >120mm.

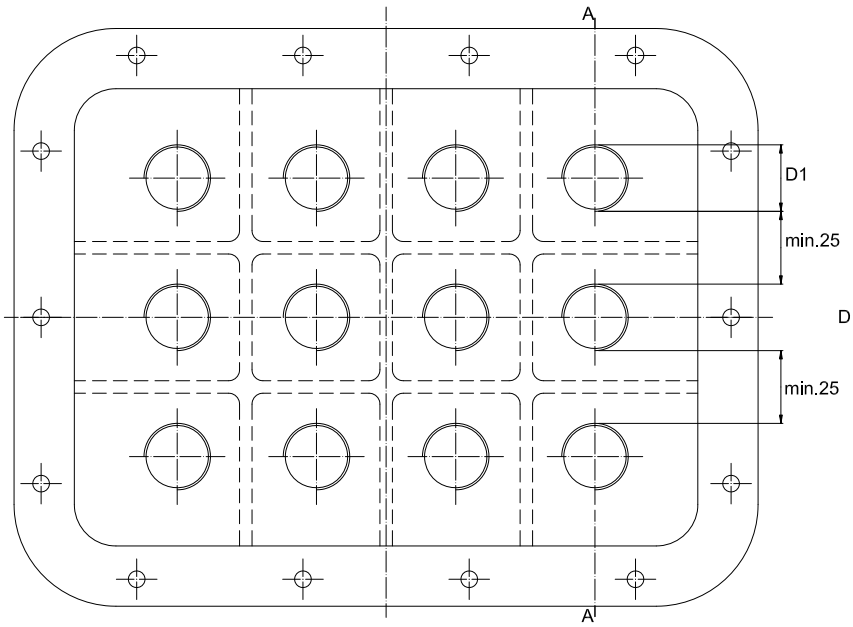


**X-SECT. A - A**

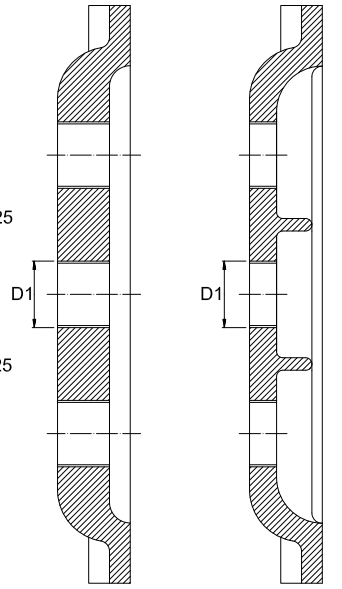

These enclosures are customized based on size, on the number of terminals or cables they are due to accommodate, or taking into account the number of cable entries and cabling requirements inside a system. Hence we can produce tailor-made solutions as long as you provide us with the appropriate parameters required at the quote request stage, such as the number of cable glands, unions or sealing fittings to be installed, so that we can determine the most suitable size of enclosure. All terminals can be fitted with your requested accessories and mounted on special rails that are fastened to the enclosure's internal mounting frames. Terminal strips can be arranged in various ways, as specified by the customer and always within the limits allowed by the certificate. The options are vertical, horizontal, in a number of rows, or on different levels using suitable spacers.

## ELECTRICAL FEATURES

**Rated voltage:** 24 / 800 V
**Rated frequency:** 50 / 60 Hz

**Modular terminals**
**Terminal cross-sectional area:** 2.5; 4; 6; 10; 25; 35; 70; 95; 120; 185; 240; 300 [mm$^2$]
**Rated current:** 12.5 - 452 [A]
**Max. current density:** 1.5 - 7 [A/mm$^2$]

**Multi-pole terminals**
**Terminal cross-sectional area:** 3x16; 4x16; 3x25; 4x25; 3x40; 3x40; 4x40; 3x70; 4x125; 4x125; 3x200; 4x200; 3x315 [mm$^2$]
**Rated current:** 48 - 252 [A]
**Max. current density:** 0.8 - 3 [A/mm$^2$]

**Busbars:**

| | | | | | | | | | |
|---|---|---|---|---|---|---|---|---|---|
| **Dimensions of busbars:** | 20x5; | 30x5; | 40x5; | 50x5; | 60x5; | 80x5; | 100x4; | 80x8; | 100x5 [mm$^2$] |
| **Rated current:** | 240 | 350 | 480 | 600 | 690 | 800 | 800 | 1000 | 1000 [A] |

**ATEX - IECEx label for terminal enclosures**

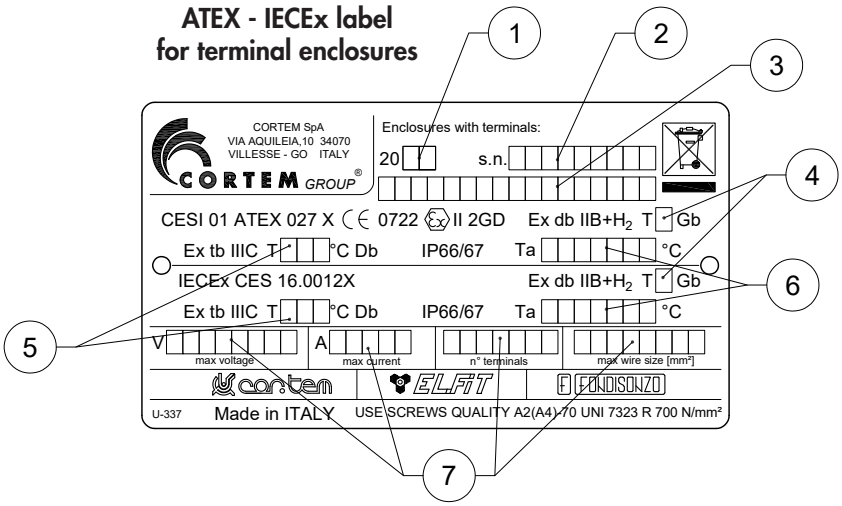


**Data filled in:**
1. year of manufacture
2. serial number
3. product code
4. temperature class
5. maximum surface temperature
6. ambient temperature
7. electrical specs per certificate

## Examples of terminal strips with minimum installation distances

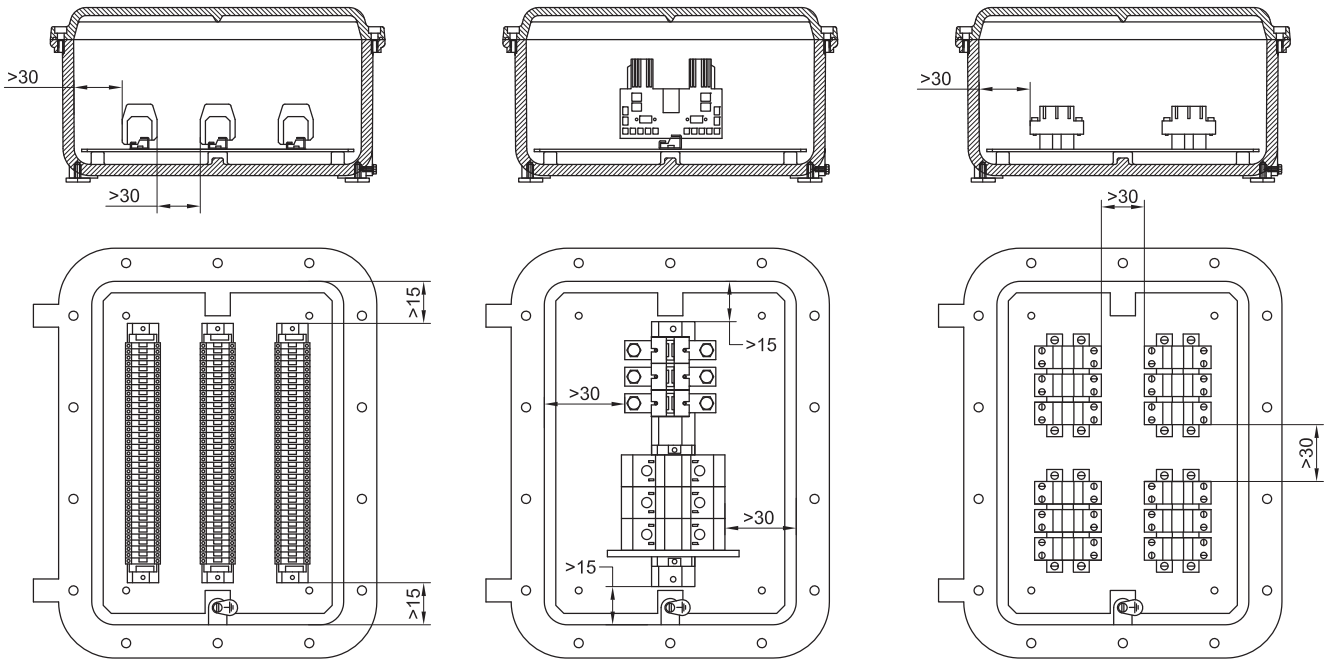


| TYPE OF ENCLOSURE | MAXIMUM NUMBER OF TERMINALS HOUSED | | | | | | | | | |
|---|---|---|---|---|---|---|---|---|---|---|
| | TERMINAL CROSS-SECTIONAL AREA | | | | | | | | | |
| | 2.5 | 4 | 6 | 10 | 16 | 35 | 70 | 120 | 185 | 240 |
| EJB-1 | 2x28 | 26 | 21 | 15 | 12 | 10 | 3 | - | - | - |
| EJB-2 | 2x38 | 2x28 | 2x22 | 2x15 | 2x12 | 18 | 4 | - | - | - |
| EJB-3 | 3x38 | 3x35 | 3x28 | 3x23 | 2x21 | 14 | 6 | 4 | 3 | 3 |
| EJB-3B | 3x38 | 3x35 | 3x28 | 3x23 | 2x21 | 14 | 6 | 4 | 3 | 3 |
| EJB-4 | 3x48 | 3x38 | 3x30 | 3x29 | 3x25 | 2x18 | 13 | 6 | 6 | 5 |
| EJB-4B | 3x48 | 3x38 | 3x30 | 3x29 | 3x25 | 2x18 | 13 | 6 | 6 | 5 |
| EJB-45 | 3x70 | 3x65 | 3x50 | 3x35 | 3x25 | 2x20 | 20 | 10 | 8 | 8 |
| EJB-45B | 3x70 | 3x65 | 3x50 | 3x35 | 3x25 | 2x20 | 20 | 10 | 8 | 8 |
| EJB-5 | 3x80 | 3x70 | 3x60 | 3x50 | 3x40 | 2x28 | 22 | 10 | 10 | 8 |
| EJB-5B | 3x80 | 3x70 | 3x60 | 3x50 | 3x40 | 2x28 | 22 | 10 | 10 | 8 |
| EJB-503 | 3x80 | 3x70 | 3x60 | 3x50 | 3x40 | 2x28 | 22 | 10 | 10 | 8 |
| EJB-55 | 4x90 | 4x80 | 4x65 | 4x50 | 4x40 | 3x30 | 25 | 13 | 13 | 13 |
| EJB-55B | 4x90 | 4x80 | 4x65 | 4x50 | 4x40 | 3x30 | 25 | 13 | 13 | 13 |
| EJB-6 | 4x120 | 4x100 | 4x80 | 4x60 | 4x50 | 3x35 | 30 | 15 | 15 | 15 |
| EJB-6B | 4x120 | 4x100 | 4x80 | 4x60 | 4x50 | 3x35 | 30 | 15 | 15 | 15 |
| EJB-6BB | 4x120 | 4x100 | 4x80 | 4x60 | 4x50 | 3x35 | 30 | 15 | 15 | 15 |
| EJB-7 | 5x150 | 5x115 | 5x90 | 5x75 | 5x60 | 4x45 | 2x35 | 2x20 | 2x20 | 2x20 |
| EJB-7B | 5x150 | 5x115 | 5x90 | 5x75 | 5x60 | 4x45 | 2x35 | 2x20 | 2x20 | 2x20 |
| AQS-1 | 3x54 | 3x40 | 3x35 | 3x32 | 3x26 | 2x18 | 12 | 6 | 4 | 4 |
| EJB-01 | 20 | 20 | 15 | 12 | 10 | 3 | - | - | - | - |

Eg. 2x28= 2 rows of 28 terminals (total 56 terminals). The maximum number of standard terminals refers to CABUR terminals

# Features of junction boxes for control, monitoring and signalling units

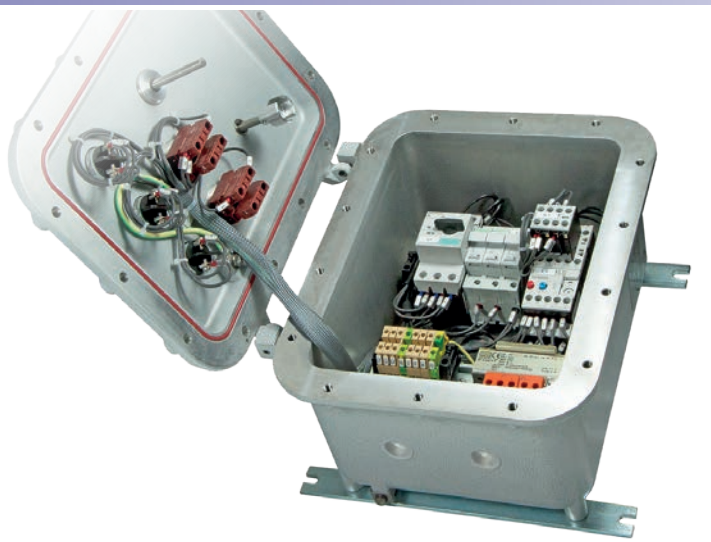

Control, monitoring and signalling units are used to produce control boards that, when positioned near the electrical equipment being controlled, enable the electrical system to operate correctly and guarantee the safety of personnel when maintenance is being performed on the system. Because they are fitted with a Manual/Automatic selector, they allow operators to select the appropriate conditions to enable work to be performed entirely safely. They offer protection and control for electrical equipment and control circuits located in explosion hazard areas and in particularly aggressive environments. They are used to hold electrical equipment, such as switches, indicators, contactors, transformers, analogue and digital components, etc.... with the option of external control by using lid-mounted Cortem control and signalling devices, such as control levers, pushbuttons, indicator lights, etc.... Cortem designs, develops and supplies full cabling for one or more enclosures tailored to your specific requirements, producing panel boards - including even extremely complex solutions - and providing a full inspection and testing service on request.

## ELECTRICAL FEATURES

**Rated voltage:** 24 / 1000 Vac 12 / 250 Vdc
**Max. current on contacts and fuses:** 650 A
**Rated frequency:** 50 / 60Hz
**Max. wattage for lamps:** 5 W (for Ta +40°C) /3 W (for Ta +55°C)

**Electrical characteristics valid for size EJB-55, EJB-6, EJB-6B, EJB-6BB, EJB-7, EJB-7B. (T5 100°C).**
**Rated voltage:** up to 690 Vac
**Max. current:** up to 1000 A

**Electrical characteristics valid for size EJB-45, EJB-5, EJB-5B, EJB-55B. (T5 100°C).**
**Rated voltage:** up to 750 Vcc
**Max. current:** up to 630 A

**Features of equipment that can be installed in enclosures to produce control and monitoring units.**
Table of electrical features of components that can be installed in enclosures to produce control, monitoring and signalling units.
(The values refer to the catalogs of the leading manufacturers of electrical/electronic components available on the market)

| COMPONENT TYPE | Max. V (Volts) | Max. I (Amperes) | Max. power (Watts) |
|---|---|---|---|
| Analogue and digital instruments | 660 | 5 | 10 |
| Electronic inverters/reactors | 400 | - | 10 |
| PLCs Multiplexers and amplifiers | 240 | - | 80 |
| Testing and measuring devices | 240 | - | 100 |
| Circuit breakers | 660 | 650 | - |
| Fuses | 660 | 400 | - |
| Relays | 500 | 10 | 12 |
| Electronic control devices | 660 | - | 100 |
| Contactors | 660 | 650 | 30 |
| Timers | 240 | 10 | 5 |
| Twilight relays | 240 | - | 2 |
| Capacitors | 660 | - | - |
| Transformers | 660 | - | 200 |
| Resistors | 240 | - | 300 |
| Terminals | 660 | - | - |
| Reactors | 277 | 7.5 | 40 |

Minimum air gap between components

| Component voltage (V ac) | Min. air gap (mm) |
|---|---|
| 60 - 250 | 6 |
| 250 - 380 | 8 |
| 380 - 500 | 10 |
| 500 - 660 | 12 |
| 660 - 1000 | 20 |
| | |
| **Component voltage (V dc)** | **Min. air gap (mm)** |
| 12 - 250 | 6 |

**Identification and description of special equipment that can be installed inside.**

### Enclosures with batteries

Option of installing low-capacity batteries ≤1.5Ah, for powering small electronic devices or backup memories.
Whatever the case, the minimum distance of 20mm between the components installed and the inside walls of the enclosure must be met.

### Enclosures with inverters

EJB-4, EJB-45, EJB-5, EJB-6, EJB-7 series enclosures, depending on the maximum ambient temperature (+40°C or + 55°C), can be fitted with inverters (ABB ACS550 or similar types) provided maximum power dissipation falls within the permitted range (see table).

| Enclosure type | Maximum inverter power for Ta +40°C | Maximum inverter power for Ta +55°C | Maximum inverter power | Cooling fan flow rate |
|---|---|---|---|---|
| EJB-4 | 2.2 kW | 1.5 kW | 73 W | 44 $m^3/h$ |
| EJB-45 | 2.2 kW | 1.5 kW | 73 W | 44 $m^3/h$ |
| EJB-5 | 5.5 kW | 4.0 kW | 172 W | 44 $m^3/h$ |
| EJB-6 | 7.5 kW | 5.5 kW | 232 W | 88 $m^3/h$ |
| EJB-7 | 7.5 kW | 5.5 kW | 232 W | 88 $m^3/h$ |

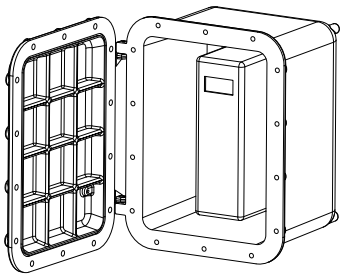

### Enclosures with surge arresters

Option of installing PRD or similar types of surge arresters, with a maximum protection limit of 65kA; whatever the case, the minimum distance of 20 mm between the arrester and the inside walls of the enclosure must be met.

### Enclosures with fibre-optic cables

The enclosures have provision for feeding multiple (not single) fibre-optic cables in and out. The permitted optical power and radiation limits for optical cables are:
- 35mW and 5mW/$m^2$ for T4 temperature class
- 15mW and 5mW/$m^2$ for T6 temperature class

### Enclosures with power transformer

Option of installing single-phase transformers (and three-phase transformers with EJB-7 only) provided maximum power is within the limits allowed by the certificate.

### Enclosures with radio-frequency sources

Option of installing components with radio-frequency sources in the 9kHz to 60GHz range that can be used for continuous and pulsed transmission of signals. Antennas can be installed inside or outside the enclosure and must:
- comply with one of the protection types indicated in standard EN 60079-0
- be installed outside the hazardous area.

For more information, refer to CESI 01 ATEX 027X.

## Table with maximum power dissipation values for EJB and AQS series enclosures.

The temperature classes and maximum surface temperatures of control and monitoring unit enclosures depend on the size of the enclosure, ambient temperature and power dissipation inside the enclosure.

| Enclosure type | Maximum power dissipation (Watts) with ambient temperature of **+40°C** | | | |
|---|---|---|---|---|
| | T6 class without indicator lights. Only indicator LEDs are allowed. | T5 class with indicator lights and/or LEDs | T5 class without indicator lights. Only indicator LEDs are allowed. | T4 class without indicator lights and/or LEDs |
| **EJB-01** | 30 | 30 | 45 | 100 |
| **EJB-1** | 45 | 45 | 65 | 140 |
| **EJB-2** | 60 | 60 | 85 | 190 |
| **EJB-3** | 75 | 75 | 110 | 245 |
| **EJB-3B** | 55 | 55 | 80 | 180 |
| **EJB-4** | 100 | 100 | 175 | 350 |
| **EJB-4B** | 75 | 75 | 130 | 260 |
| **EJB-45** | 140 | 140 | 240 | 480 |
| **EJB-45B** | 120 | 120 | 210 | 430 |
| **EJB-5** | 210 | 210 | 315 | 600 |
| **EJB-5B** | 170 | 170 | 250 | 480 |
| **EJB-503** | 230 | 230 | 345 | 660 |
| **EJB-55** | 260 | 260 | 380 | 740 |
| **EJB-55B** | 210 | 210 | 315 | 600 |
| **EJB-6** | 600 | 600 | 910 | 1740 |
| **EJB-6B** | 490 | 490 | 720 | 1390 |
| **EJB-6BB** | 390 | 390 | 575 | 1110 |
| **EJB-7** | 770 | 770 | 1170 | 2270 |
| **EJB-7B** | 600 | 600 | 910 | 1740 |
| **AQS-1** | 100 | 100 | 150 | 280 |

| Enclosure type | Maximum power dissipation (Watts) with ambient temperature of **+55°C** | | | |
|---|---|---|---|---|
| | T6 class without indicator lights. Only indicator LEDs are allowed. | T5 class with indicator lights and/or LEDs | T5 class without indicator lights. Only indicator LEDs are allowed. | T4 class without indicator lights and/or LEDs |
| **EJB-01** | 25 | 25 | 40 | 80 |
| **EJB-1** | 34 | 34 | 50 | 105 |
| **EJB-2** | 45 | 45 | 65 | 142 |
| **EJB-3** | 56 | 56 | 82 | 184 |
| **EJB-3B** | 40 | 40 | 60 | 135 |
| **EJB-4** | 75 | 75 | 130 | 262 |
| **EJB-4B** | 56 | 56 | 100 | 195 |
| **EJB-45** | 105 | 105 | 180 | 360 |
| **EJB-45B** | 90 | 90 | 160 | 320 |
| **EJB-5** | 160 | 160 | 235 | 450 |
| **EJB-5B** | 130 | 130 | 190 | 360 |
| **EJB-503** | 176 | 176 | 255 | 495 |
| **EJB-55** | 200 | 200 | 300 | 565 |
| **EJB-55B** | 160 | 160 | 235 | 450 |
| **EJB-6** | 460 | 460 | 680 | 1300 |
| **EJB-6B** | 370 | 370 | 550 | 1040 |
| **EJB-6BB** | 295 | 295 | 440 | 832 |
| **EJB-7** | 590 | 590 | 890 | 2090 |
| **EJB-7B** | 460 | 460 | 680 | 1300 |
| **AQS-1** | 75 | 75 | 110 | 205 |

| Enclosure type | Maximum power dissipation (Watts) with ambient temperature of **+70°C** | | | |
|---|---|---|---|---|
| | T6 class without indicator lights. Only indicator LEDs are allowed. | T5 class with indicator lights and/or LEDs | T5 class without indicator lights. Only indicator LEDs are allowed. | T4 class without indicator lights and/or LEDs |
| **EJB-01** | 20 | 20 | 35 | 60 |
| **EJB-1** | 23 | 23 | 35 | 70 |
| **EJB-2** | 30 | 30 | 45 | 94 |
| **EJB-3** | 37 | 37 | 54 | 123 |
| **EJB-3B** | 25 | 25 | 40 | 90 |
| **EJB-4** | 50 | 50 | 85 | 174 |
| **EJB-4B** | 37 | 37 | 70 | 130 |
| **EJB-45** | 70 | 70 | 120 | 240 |
| **EJB-45B** | 60 | 60 | 150 | 290 |
| **EJB-5** | 110 | 110 | 155 | 300 |
| **EJB-5B** | 90 | 90 | 130 | 240 |
| **EJB-503** | 122 | 122 | 165 | 390 |
| **EJB-55** | 140 | 140 | 220 | 390 |
| **EJB-55B** | 110 | 110 | 155 | 300 |
| **EJB-6** | 320 | 320 | 450 | 860 |
| **EJB-6B** | 250 | 250 | 380 | 690 |
| **EJB-6BB** | 200 | 200 | 305 | 550 |
| **EJB-7** | 410 | 410 | 610 | 1910 |
| **EJB-7B** | 320 | 320 | 450 | 860 |
| **AQS-1** | 50 | 50 | 70 | 130 |

## ELECTRICAL FEATURES

| | | |
|---|---|---|
| **Rated voltage:** | 24 / 1000 Vac | 12 / 250 Vdc |
| **Max. current on contacts and fuses:** | 400 A | |
| **Rated frequency:** | 50 / 60Hz | |
| **Max. wattage for lamps:** | 3 W (for Ta +55°C) | |
| **Associated apparatus:** | max. voltage Um≤250V | |

## GENERAL INSTALLATION INFORMATION

The maximum power dissipation inside the enclosure depends on the maximum current on contacts and fuses, the size of the enclosure, the temperature class (or maximum surface temperature for 2GD category) and ambient temperature, as specified in the maximum power dissipation tables (see previous page).
The maximum power dissipation must not exceed the values given in the table when non-'Ex i' components and 'Ex i' components (with 1.1W maximum power dissipation) are installed together.
The maximum power dissipation possible inside the enclosure will also depend on the maximum power dissipation of terminals, contacts and cables; whatever the case, the current density value allowed in the enclosure is prescribed by EN 60439-1, IEC 60439-1.

### Details of barrier mounting inside enclosures

The "omega" rail, in accordance with EN 60079-11, is suitable for mounting barriers inside 'Ex d' enclosures.
Barriers are mounted (according to the manufacturer's directions) 7.5 mm away from the base of the enclosure and are secured to the DIN rail with 2 earth terminals (nominal cross-sectional area 6-10 mm) and 2 standard terminals for omega rails (EN 60079-11).
Up to how many barriers can be installed in the enclosures will depend on the properties of the barriers in question; in addition, the maximum number of barriers must not exceed the limit allowed by the certificate in any case.

Associated equipment can also be mounted on a DIN rail; when it is mounted on the enclosure's internal mounting plate, reference must be made to the minimum prescribed distances. Whether mounted on a rail or mounting plate, associated equipment must meet the following requirements:

### Separators

When separators are used, they must be appropriately sized; their thickness and fastening inside the enclosure must be suitably determined and separators must allow air to circulate inside the enclosure.

### Incoming cables

Incoming cables for 'Ex i' circuits must be suitably labelled or the area around the entry must be coloured blue RAL 5015. 'Ex i' entries must be clearly identified

### Installation of 'Ex i' and non-'Ex i' components inside the enclosure.

Ex d IIB certified enclosures complete with accessories can contain only Ex ia IIB/IIC associated equipment; in this case, the resulting version becomes Ex d [ia] IIB.

### Connection of internal cables

Cables are connected inside the enclosure to the barriers in accordance with EN 60079-11, with one side for connecting 'Ex i' cables and the opposite side for connecting non-'Ex i' cables.
Connection in 'Ex i' circuits must be made using insulated cables only; there must be no connections to non-'Ex i' circuits and no more than one cable can be connected to a single terminal. 'Ex i' cables cannot be grouped together with non-'Ex i' cables; in addition, 'Ex i' cables and non-'Ex i' cables must be kept separated. The minimum distance between the 2 types of cables must be 8 mm. The minimum insulation level for non-'Ex i' cables must be greater than 1.5 kV; the minimum insulation level for 'Ex i' cables must be greater than 0.5 kV.

### Internal connections

When routing cables belonging to 'Ex i' circuits, the cables must be identified in one of the following ways:

- cables must have blue insulation (as long as there are no other cables inside the enclosure with this colour).
- 'Ex i' cables must be kept separate from non-'Ex i' cables with blue cable raceways.
- 'Ex i' cables must be grouped together, using a tie, for example, and the area identified with a blue label.

  Warning 'Ex i' circuits

- cables for power circuits must have a cross-sectional area of at least 1.5 $mm^2$.
- 'Ex i' circuits must be kept at a distance of 50 mm from non-'Ex i' circuits.
- the earth connection must meet European standard EN 60079-14.

The number of items of equipment mounted inside the enclosures and their layout will vary based on the following:

- in accordance with EN 60079-1 and IEC 60079-1, the equipment contained inside the enclosure can be arranged in any way provided that at least 40% of the surface area of each section is left free.
- equipment must be set at a suitable distance to accommodate cable wiring.

## Maximum dimensions of 'Ex ia' equipment that can be installed inside enclosures.

| | d | e | f |
|---|---|---|---|
| EJB-01 | 140 | 40 | 20 |
| EJB-1 | 160 | 60 | 110 |
| EJB-2 | 280 | 80 | 110 |
| EJB-3 | 150 | 140 | 170 |
| EJB-3B | 150 | 140 | 110 |
| EJB-4 | 280 | 180 | 190 |
| EJB-4B | 280 | 180 | 120 |
| EJB-45 | 410 | 225 | 170 |
| EJB-45B | 410 | 225 | 120 |
| EJB-5 | 480 | 280 | 220 |
| EJB-5B | 480 | 280 | 150 |
| EJB-55 | 550 | 350 | 340 |
| EJB-55B | 550 | 350 | 240 |
| EJB-6 | 670 | 450 | 300 |
| EJB-6B | 670 | 450 | 200 |
| EJB-6BB | 670 | 450 | 120 |
| AQS-1 | 350 | 300 | 90 |

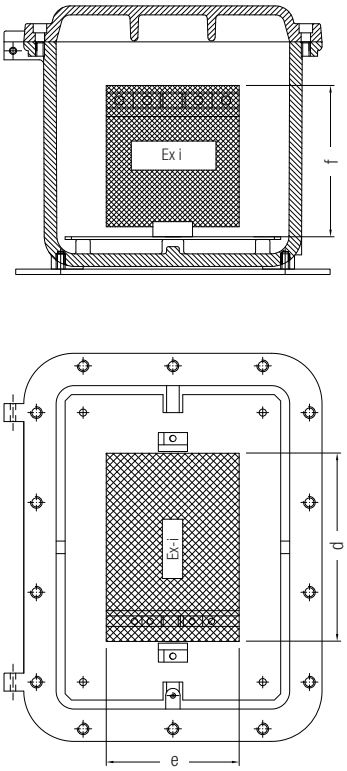


## Examples of installation of associated equipment - minimum distances.

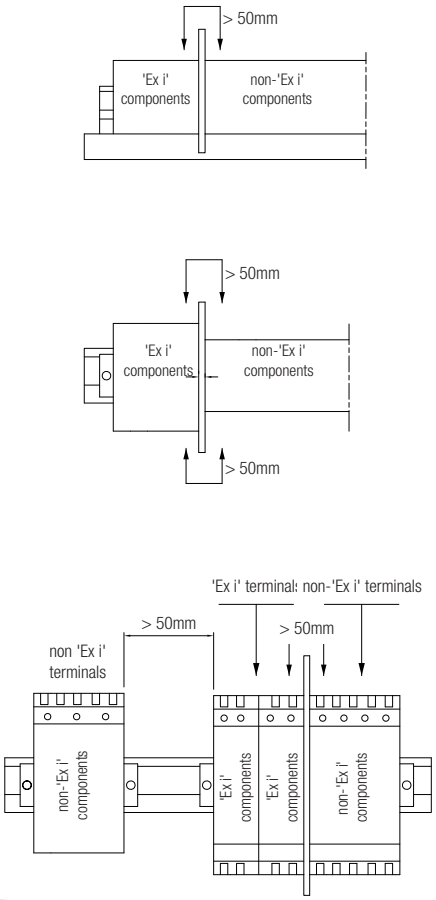


## Example of interface unit (with associated equipment) complete with separator

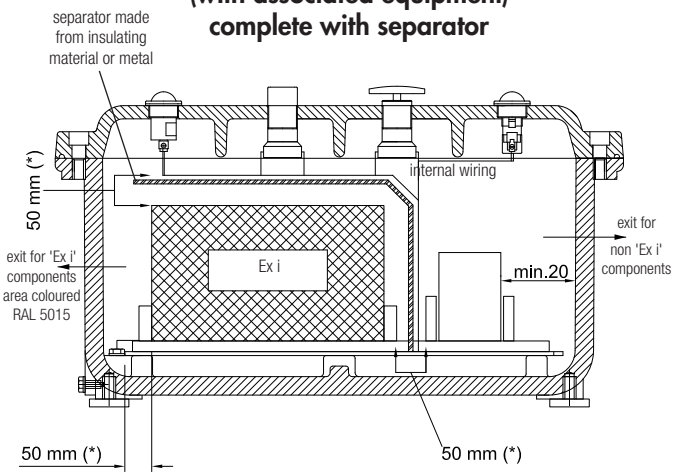


## Example of interface unit without separator

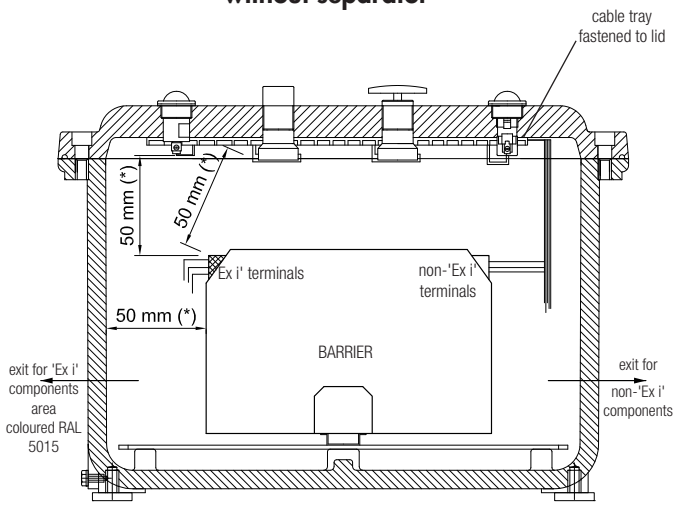


NOTES

(*) 50 mm is the minimum safe distance between 'Ex i' components and non-'Ex i' components (and/or conducting parts).

- The active and passive barriers that can be installed in the enclosures must have their own ATEX certificate.
- The maximum voltage entering barriers on non-'Ex i' circuits must be less than 250 V.

# EJB-... series Junction boxes with round viewing windows

EJB series junction boxes are used as enclosures for electrical equipment that requires a visual interface with the outside. Voltmeters, ammeters and other analogue and digital measuring instruments are typical examples of installations that require a window for taking direct readings. These enclosures are also used to house monitoring instruments such as infra-red photoelectric cells and twilight sensors that provide pulses for control and signalling equipment (opening/closing, alarms, etc....). Our technical department will decide what size enclosures to use based on your requirements and determine the internal layout so that all the dimensional and electrical parameters prescribed by the certificate are met. We can install equipment to your specifications within the technical limits allowed by the certificate and based on our standard control and signalling devices.

**K-0253**
***Ø 90***

**K-0254**
***Ø 140***

**K-0255**
***Ø 180***

## DIMENSIONAL DRAWING OF ENCLOSURES WITH ROUND VIEWING WINDOWS

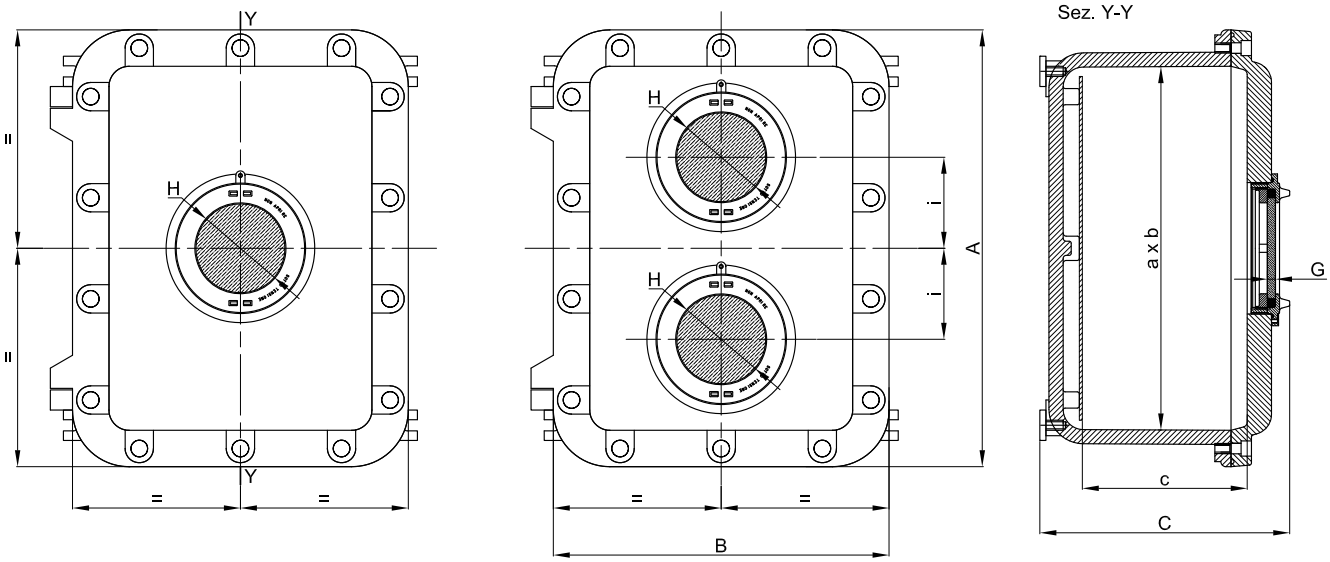


## WINDOW DETAIL (cross-section)

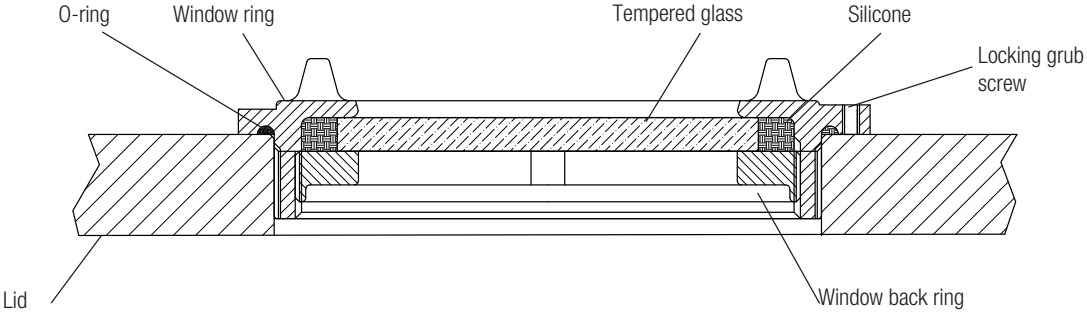

# EJB-... series Junction boxes with round viewing windows

| Code | Outside dimensions | | | Inside dimensions | | | N° of windows | Size of windows | | | Weight |
|---|---|---|---|---|---|---|---|---|---|---|---|
| | A | B | C | a | b | c | | H | G | i | kg |
| EJB-2/1W0 | 424 | 224 | 218 | 360 | 160 | 153 | 1 | 90 | 10 | - | |
| EJB-3/1W0 | 364 | 284 | 278 | 300 | 220 | 213 | 1 | 90 | 10 | - | |
| EJB-3B/1W0 | 364 | 284 | 218 | 300 | 220 | 153 | 1 | 90 | 10 | - | |
| EJB-4/2W0 | 432 | 332 | 299 | 360 | 260 | 233 | 2 | 90 | 10 | 90 | |
| EJB-4B/2W0 | 432 | 332 | 229 | 360 | 260 | 163 | 2 | 90 | 10 | 90 | |
| EJB-4/1W2 | 432 | 332 | 299 | 360 | 260 | 233 | 1 | 140 | 12 | - | |
| EJB-4B/1W2 | 432 | 332 | 229 | 360 | 260 | 163 | 1 | 140 | 12 | - | |
| EJB-45/2W0 | 567 | 387 | 298 | 490 | 305 | 229 | 2 | 90 | 10 | 90 | |
| EJB-45B/2W0 | 567 | 387 | 253 | 490 | 305 | 179 | 2 | 90 | 10 | 90 | |
| EJB-45/1W2 | 567 | 387 | 298 | 490 | 305 | 229 | 1 | 140 | 12 | - | |
| EJB-45B/1W2 | 567 | 387 | 253 | 490 | 305 | 179 | 1 | 140 | 12 | - | |
| EJB-5/2W0 | 632 | 432 | 341 | 560 | 360 | 275 | 2 | 90 | 10 | 140 | |
| EJB-5B/2W0 | 632 | 432 | 271 | 560 | 360 | 205 | 2 | 90 | 10 | 140 | |
| EJB-5/1W2 | 632 | 432 | 341 | 560 | 360 | 275 | 1 | 140 | 12 | - | |
| EJB-5B/1W2 | 632 | 432 | 271 | 560 | 360 | 205 | 1 | 140 | 12 | - | |
| EJB-5/1W3 | 632 | 432 | 341 | 560 | 360 | 275 | 1 | 180 | 15 | - | |
| EJB-5B/1W3 | 632 | 432 | 271 | 560 | 360 | 205 | 1 | 180 | 15 | - | |
| EJB-503/2W0 | 632 | 432 | 397 | 560 | 360 | 330 | 2 | 90 | 10 | 140 | |
| EJB-503/1W2 | 632 | 432 | 397 | 560 | 360 | 330 | 1 | 140 | 12 | - | |
| EJB-503/1W3 | 632 | 432 | 397 | 560 | 360 | 330 | 1 | 180 | 15 | - | |
| EJB-55/3W0 | 710 | 510 | 356 | 630 | 430 | 273 | 3 | 90 | 10 | - | |
| EJB-55B/3W0 | 710 | 510 | 256 | 630 | 430 | 173 | 3 | 90 | 10 | - | |
| EJB-55/2W2 | 710 | 510 | 356 | 630 | 430 | 273 | 2 | 140 | 12 | 130 | |
| EJB-55B/2W2 | 710 | 510 | 256 | 630 | 430 | 173 | 2 | 140 | 12 | 130 | |
| EJB-55/2W3 | 710 | 510 | 356 | 630 | 430 | 273 | 2 | 180 | 15 | 160 | |
| EJB-55B/2W3 | 710 | 510 | 256 | 630 | 430 | 173 | 2 | 180 | 15 | 160 | |
| EJB-6/2W0 | 870 | 650 | 480 | 760 | 540 | 353 | 2 | 90 | 10 | - | |
| EJB-6B/2W0 | 870 | 650 | 380 | 760 | 540 | 253 | 2 | 90 | 10 | - | |
| EJB-6BB/2W0 | 870 | 650 | 303 | 760 | 540 | 209 | 2 | 90 | 10 | - | |
| EJB-6/2W2 | 870 | 650 | 480 | 760 | 540 | 353 | 2 | 140 | 12 | - | |
| EJB-6B/2W2 | 870 | 650 | 380 | 760 | 540 | 253 | 2 | 140 | 12 | - | |
| EJB-6BB/2W2 | 870 | 650 | 303 | 760 | 540 | 209 | 2 | 140 | 12 | - | |
| EJB-6/1W3 | 870 | 650 | 480 | 760 | 540 | 353 | 1 | 180 | 15 | - | |
| EJB-6B/1W3 | 870 | 650 | 380 | 760 | 540 | 252 | 1 | 180 | 15 | - | |
| EJB-6BB/1W3 | 870 | 650 | 303 | 760 | 540 | 209 | 1 | 180 | 15 | - | |
| EJB-7/3W0 | 1000 | 700 | 500 | 890 | 590 | 340 | 3 | 90 | 10 | - | |
| EJB-7B/3W0 | 1000 | 700 | 400 | 890 | 590 | 240 | 3 | 90 | 10 | - | |

# EJB-... series Junction boxes with viewing windows

We can provide standard windows to meet your requirements for the various enclosure types for such purposes as viewing analogue or digital instruments, indicators of various kinds.

**DIMENSIONAL DRAWING OF ENCLOSURES WITH RECTANGULAR WINDOWS (tempered glass).**

Position of standard window in centre.

Non-standard window positions or dimensions on request.

**(drawing 1)**

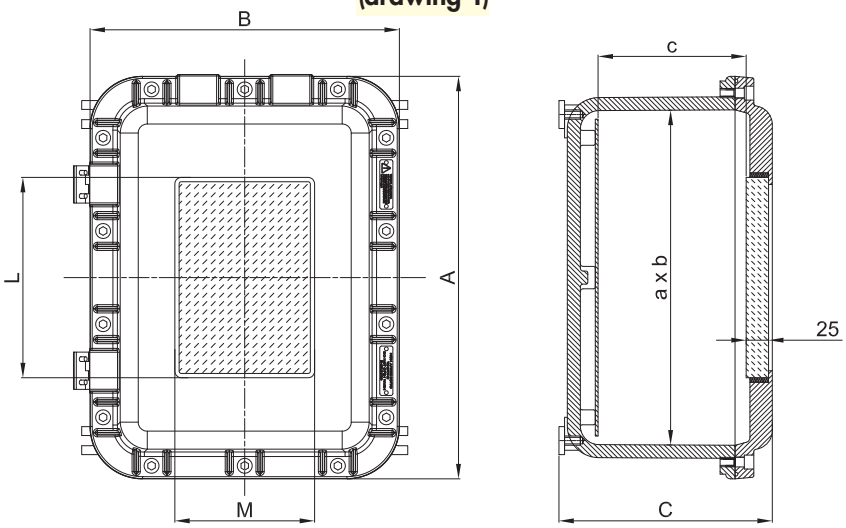


**ENCLOSURES WITH STANDARD 300x200 CAST WINDOWS**

**(drawing 2)**

DETAIL
**EJB-4/3020**
**EJB-4B/3020**

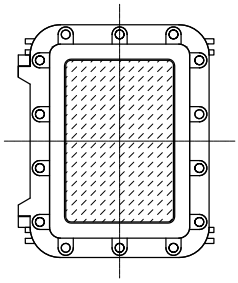

DETAIL
**EJB-45/3020**
**EJB-45B/3020**

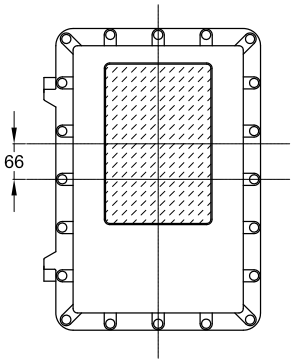


DETAIL
**EJB-5/3020**
**EJB-5B/3020**

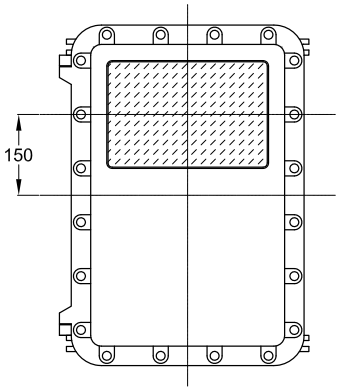


DETAIL
**EJB-5/3020C**
**EJB-5B/3020C**

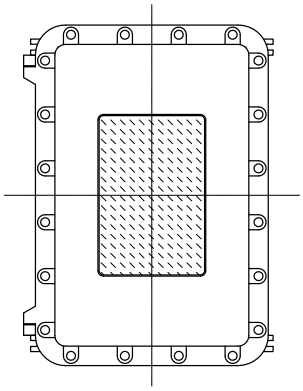

| Code | Outside dimensions A | B | C | Internal dimensions a | b | c | Window size M | L | Positioning of window | Weight kg |
|---|---|---|---|---|---|---|---|---|---|---|
| **Enclosures with standard machined windows** | | | | | | | | | | |
| EJB-1/1508 | 304 | 204 | 218 | 240 | 140 | 149 | 80 | 150 | Central as illustrated in "drawing 1". Non-standard window positioning or dimensions on request | |
| EJB-2/2508 | 424 | 224 | 218 | 360 | 160 | 149 | 80 | 250 | | |
| EJB-3/2015 | 364 | 284 | 278 | 300 | 220 | 209 | 150 | 200 | | |
| EJB-3B/2015 | 364 | 284 | 218 | 300 | 220 | 149 | 150 | 200 | | |
| EJB-4/3020 | 432 | 332 | 299 | 360 | 260 | 229 | 200 | 300 | | |
| EJB-4B/3020 | 432 | 332 | 229 | 360 | 260 | 159 | 200 | 300 | | |
| EJB-45/3020SP | 567 | 387 | 298 | 490 | 305 | 229 | 200 | 300 | | |
| EJB-45B/3020SP | 567 | 387 | 248 | 490 | 305 | 184 | 200 | 300 | | |
| EJB-5/3020SP | 632 | 432 | 341 | 560 | 360 | 271 | 200 | 300 | | |
| EJB-5B/3020SP | 632 | 432 | 271 | 560 | 360 | 201 | 200 | 300 | | |
| EJB-503/3020SP | 632 | 432 | 397 | 560 | 360 | 327 | 200 | 300 | | |
| EJB-55/3020 | 710 | 510 | 356 | 630 | 430 | 270 | 200 | 300 | | |
| EJB-55B/3020 | 710 | 510 | 256 | 630 | 430 | 170 | 200 | 300 | | |
| EJB-6/3020 | 870 | 650 | 480 | 760 | 540 | 348 | 200 | 300 | | |
| EJB-6B/3020 | 870 | 650 | 380 | 760 | 540 | 248 | 200 | 300 | | |
| EJB-6BB/3020 | 870 | 650 | 303 | 760 | 540 | 209 | 200 | 300 | | |
| EJB-7/2010 | 1000 | 700 | 500 | 890 | 590 | 340 | 100 | 200 | Central (ribbed lid) | |
| EJB-7B/2010 | 1000 | 700 | 400 | 890 | 590 | 240 | 100 | 200 | | |
| **Enclosures with standard cast windows** | | | | | | | | | | |
| EJB-4/3020 | 432 | 332 | 229 | 360 | 260 | 159 | 200 | 300 | Central as illustrated in "drawing 2". | |
| EJB-4B/3020 | 432 | 332 | 229 | 360 | 260 | 159 | 200 | 300 | | |
| EJB-45/3020 | 567 | 387 | 298 | 490 | 305 | 229 | 200 | 300 | | |
| EJB-45B/3020 | 567 | 387 | 248 | 490 | 305 | 179 | 200 | 300 | | |
| EJB-5/3020 | 632 | 432 | 341 | 560 | 360 | 271 | 200 | 300 | | |
| EJB-5B/3020 | 632 | 432 | 271 | 560 | 360 | 201 | 200 | 300 | | |
| EJB-5/3020C | 632 | 432 | 341 | 560 | 360 | 271 | 200 | 300 | | |
| EJB-5B/3020C | 632 | 432 | 271 | 560 | 360 | 201 | 200 | 300 | | |

**DON'T FORGET TO ORDER THE ACCESSORIES**

**Example:** Enclosure type EJB-55 + Internal mounting plate BFE-55 + Hinges 218-9301 + other...see key

# EJB-... series Accessories available on request and spare parts

| ILLUSTRATION | DESCRIPTION | MODEL | FEATURES | CODE | KEY |
|---|---|---|---|---|---|
| | Internal mounting plates | EJB-01 | Thickness 2.5mm<br>Aluminium (BFE-...)<br>Galvanized steel (BFE-...AC)<br>Stainless steel (BFE-...SS) | **BFE-01** | ACCESSORY SPARE PART |
| | | EJB-1 | | **BFE-1** | |
| | | EJB-2 | | **BFE-2** | |
| | | EJB-3/3B | | **BFE-3** | |
| | | EJB-4/4B | | **BFE-4** | |
| | | EJB-45/45B | | **BFE-45** | |
| | | EJB-48BA | | **BFE-48** | |
| | | EJB-5/5B | | **BFE-5** | |
| | | EJB-55/55B | | **BFE-55** | |
| | | EJB-6/6B/6BB | | **BFE-6** | |
| | | EJB-7/7B | | **BFE-7** | |
| | | AQS-1 | | **K-171** | |
| | Breather and drain valve | Thread diameter ISO 7-R 3/8" | Material: stainless steel | **ECD-210S** | ACCESSORY SPARE PART |
| | Hinges (2 per enclosure) | EJB-01 | Material: stainless steel | **K-0351** | ACCESSORY SPARE PART |
| | Cable glands and unions | | For models and codes, visit www.cortemgroup.com | | ACCESSORY SPARE PART |
| | Sealed bushings | | For models and codes, visit www.cortemgroup.com | | ACCESSORY SPARE PART |
| | Lid-mounted control and signalling devices | | For control and signalling device models and codes, see control and monitoring device chapter | **M-0...** | ACCESSORY SPARE PART |
| | N°2 hinges per enclosure (n°3 per EJB-6, EJB-7) | EJB-... | Material: stainless steel | **218-9301** | SPARE PART |
| | | EJB-6 / EJB-7 | | **218-9303** | |
| | Mounting brackets | EJB-01 | Material: galvanized steel | **K01-237** | SPARE PART |
| | | EJB-1 | | **K1-237** | |
| | | EJB-2 | | **K2-237** | |
| | | EJB-3/3B | | **K3-237** | |
| | | EJB-4/4B | | **K4-237** | |
| | | EJB-45/45B | | **K45-237** | |
| | | EJB-48BA<br>EJB-5/5B | | **K5-237** | |
| | | EJB-55/55B | | **K55-237** | |
| | | EJB-6/6B/6BB | | **K6-237** | |
| | | EJB-7/7B | | **K7-237** | |
| | O-ring between body and lid | EJB-01 | Material: red-coloured silicone | **K01-131/1S** | SPARE PART |
| | | EJB-1 | | **K1-131/1S** | |
| | | EJB-2 | | **K2-131/1S** | |
| | | EJB-3/3B | | **K3-131/1S** | |
| | | EJB-4/4B | | **K4-131/1S** | |
| | | EJB-45/45B | | **K45-131/1S** | |
| | | EJB-48BA | | **K48-131/1S** | |
| | | EJB-5/5B | | **K5-131/1S** | |
| | | EJB-55/55B | | **K55-131S** | |
| | | EJB-6/6B/6BB | | **K6-131/1S** | |
| | | EJB-7/7B | | **K61-131S** | |

## Dimensional drawings of internal mounting plates and mounting brackets

| Enclosures | Internal mounting plates | | | | |
|---|---|---|---|---|---|
| | A | B | a | b | Code |
| EJB-01 | 205 | 100 | 193 | 53 | BFE-01 |
| EJB-1 | 220 | 120 | 180 | 80 | BFE-1 |
| EJB-2 | 340 | 140 | 300 | 100 | BFE-2 |
| EJB-3 /3B | 280 | 200 | 240 | 160 | BFE-3 |
| EJB-4 /4B | 340 | 240 | 300 | 200 | BFE-4 |
| EJB-45 /45B | 460 | 280 | 440 | 260 | BFE-45 |
| EJB-48BA | 400 | 320 | 360 | 280 | BFE-48 |
| EJB-5 /5B | 530 | 330 | 500 | 300 | BFE-5 |
| EJB-55 /55B | 600 | 400 | 560 | 360 | BFE-55 |
| EJB-6 /6B /6BB | 720 | 500 | 680 | 460 | BFE-6 |
| EJB-7 /7B | 850 | 550 | 820 | 520 | BFE-7 |
| AQS-1 | 400 | 360 | 380 | 330 | K-171 |

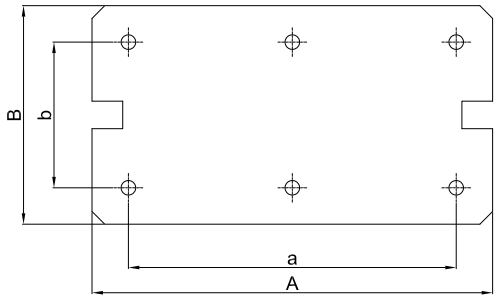


| Enclosures | Mounting brackets | | | | |
|---|---|---|---|---|---|
| | A | B | E | F | Code |
| EJB-1 | 230 | 30 | 210 | 9 | K1-237 |
| EJB-2 | 250 | 30 | 230 | 9 | K2-237 |
| EJB-3 /3B | 310 | 30 | 290 | 9 | K3-237 |
| EJB-4 /4B | 350 | 30 | 330 | 11 | K4-237 |
| EJB-45 /45B | 376 | 30 | 356 | 11 | K45-237 |
| EJB-48BA<br>EJB-5 /5B | 450 | 30 | 430 | 11 | K5-237 |
| EJB-55 /55B | 510 | 30 | 496 | 11 | K55-237 |
| EJB-6 /6B /6BB | 620 | 50 | 580 | 14 | K6-237 |
| EJB-7 /7B | 690 | 70 | 655 | 18 | K7-237 |

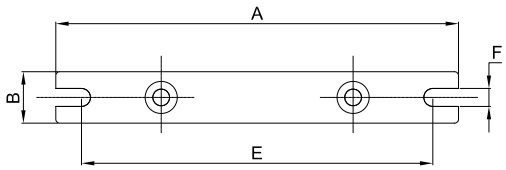


**Example of control panel with floor-mounting system and detail of connection with sealed bushings.**

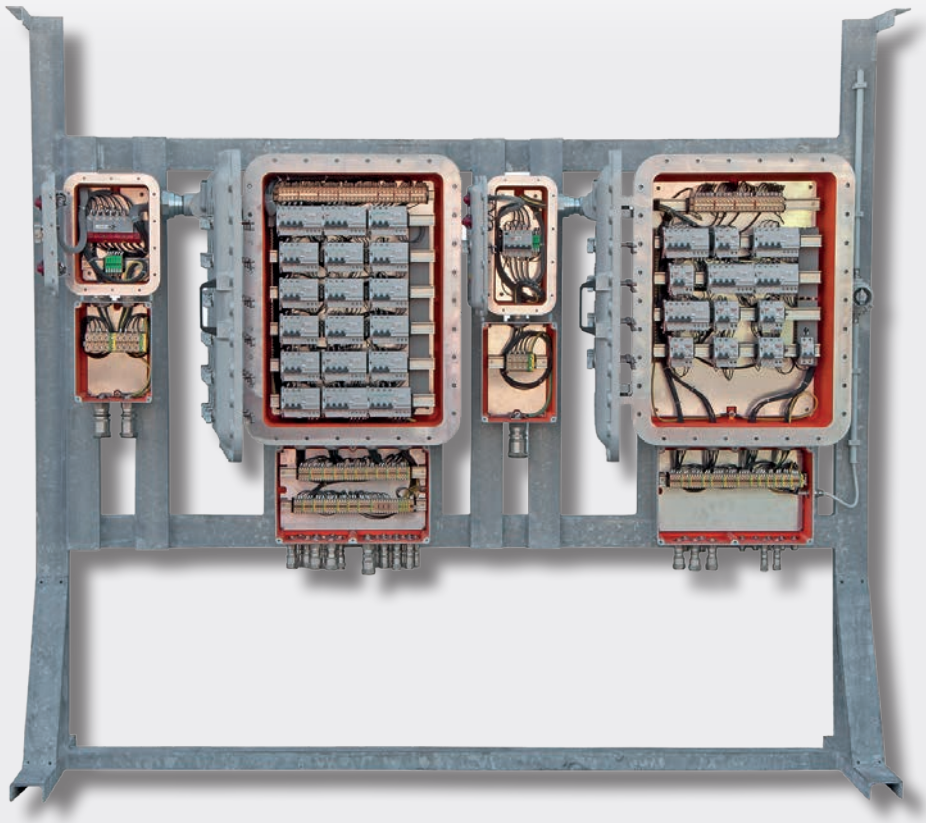

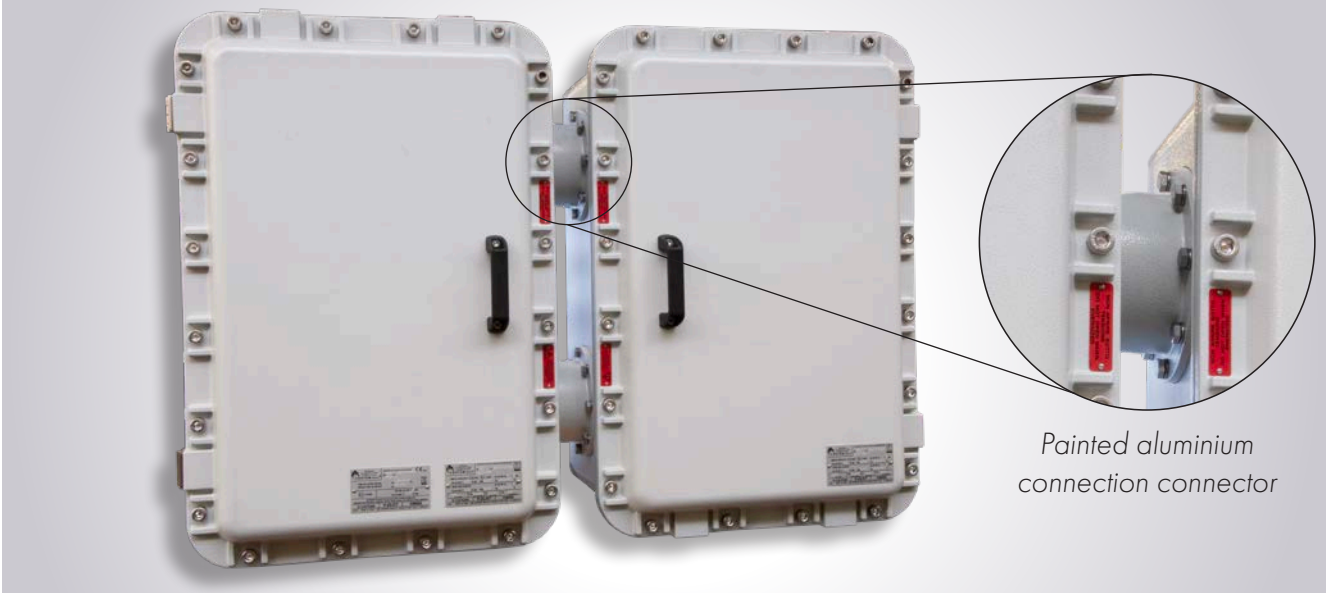


*The casings can be supplied with all the accessories, both inside and on the lid, specified in the certificates listed in this dossier.*

The DCP series represents a modular, compact and highly reliable solution for distribution and monitoring in potentially explosive atmospheres. The assembly consists of two or three casings with models EJB-45/45B, EJB-5/5B or EJB-55/55B, ATEX- and IECEx-certificate, interconnected via dedicated connectors that ensure continuity of protection and simple wiring between the different sections of the panel.
The certified connection connectors are available in two configurations to cover different gas groups:

- Cylindrical joints between connector and casing wall for gas group IIB
- Threaded joints between connector and casing wall for gas group IIB + $H_2$

The DCP series therefore does not require the installation of external sealing fittings, simplifying installation and reducing assembly time; moreover, thanks to the compact design of the modules and the elimination of bulky external sealing components, the system takes up less space than traditional configurations.
The modules can be fixed both on classic frames and on modular frames, offering maximum design flexibility and adaptability to different plant layouts.

## CERTIFICATE DATA

| | | | | |
|---|---|---|---|---|
| **Classification:** | Group II | Category 2GD | | |
| **Installation:** EN 60079.14 | zone 1 - zone 2 (Gas) | zone 21 - zone 22 (Dust) | | |
| **Marking:** | CE 0722 Ex II 2(1)GD - Ex db eb [ia Ga] IIB+$H_2$ T... Gb<br>CE 0722 Ex II 2(1)D Ex tb [ia Ga] IIIC T...°C Db | | | |
| **Certificate:** | ATEX FIDI 25 ATEX 0035X | | | |
| | IEC Ex FIDI 25.0015X | For all IEC Ex certificate data, download the certificate from www.cortemgroup.com | | |
| **Standards:** | CENELEC EN 60079-0: 2018, EN 60079-1: 2014, EN 60079-11: 2012, EN 60079-7: 2015+A1:2018, EN 60079-31: 2014, EN 60439-1 and European Directive 2014/34/EU | | | |
| **Ambient temperature:** | -20°C +70°C | | | |
| | -40°C +70°C | | | |
| **Degree of protection:** | IP66/67 | For casings without control and signalling stations | | |
| | IP66 | For casings with Cortem M-0... series control and signalling stations | | |

| | Gas group | Ambient Temp. -20°C | Ambient Temp. -40°C |
|---|---|---|---|
| A - A | IIB | ✓ | ✓ |
| | IIB + $H_2$ | ✓ | ✓ |
| A - B - A | IIB | ✓ | ✗ |

## CONFIGURATIONS

Gas group IIB + $H_2$ T.amb. > -40°C

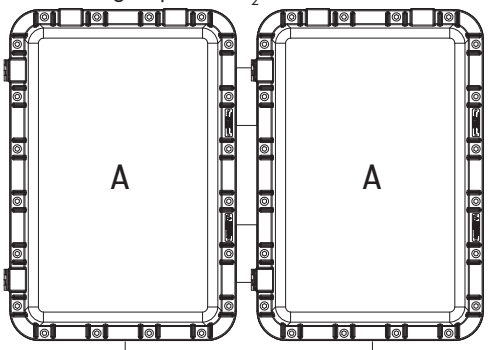


Gas group IIB Ambient temp. > -20°C

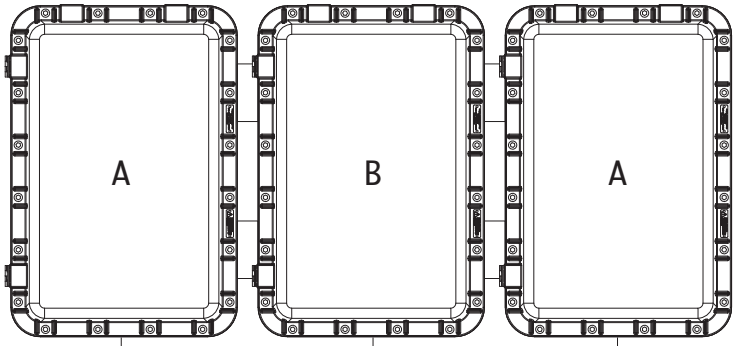


### Order code logic

DCP - [ ] [ ]

**DCP** Fixed code

**n.a.** Aluminium casing
**x** Stainless steel casing

**2** For two casings (Gas group IIB)
**3** For three casings (Gas group IIB)
**H2** For two casings (Gas group IIB+$H_2$)

### Casing model

*EJB-45B* *EJB-45*
*EJB-5B* *EJB-5*
*EJB-55B* *EJB-55*

### Cross-section detail connector - internal cable

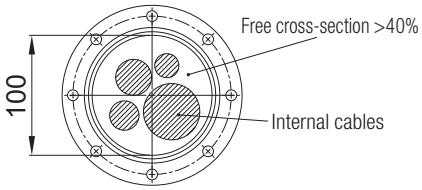


## DISTRIBUTION AND MONITORING PANELS WITH PYNC SOCKETS ON MODULAR FRAMES

| | | |
|---|---|---|
| **Classification:** | Group II | Category 2GD |
| **Installation:** EN 60079.14 | zone 1 - zone 2 (Gas) | zone 21 - zone 22 (Dust) |
| **Marking:** | CE 0722 Ex II 2GD - Ex db eb IIB+$H_2$ T... Gb<br>CE 0722 Ex II 2D Ex tb IIIC T...°C Db | |
| **Certificate:** | ATEX FIDI 25 ATEX 0035X | |
| | IEC Ex FIDI 25.0015X | |

### Typical installation

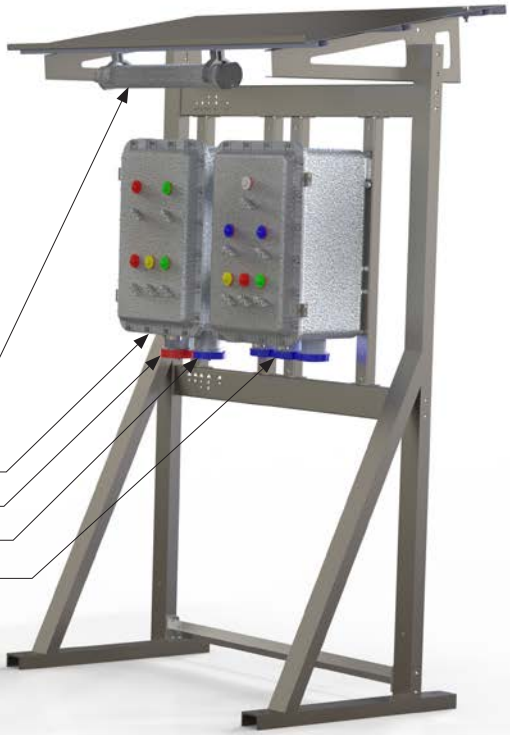


### Minimum drilling distances for socket bodies

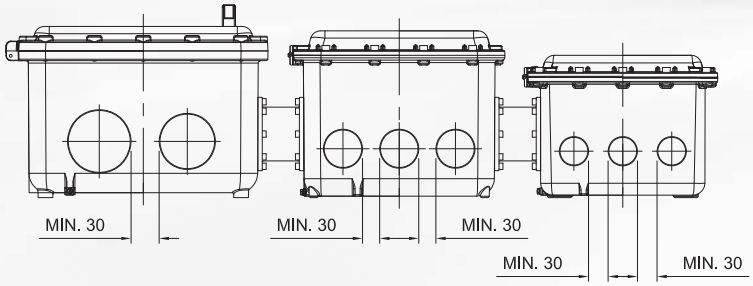


The new Cortem modular frames suitable for supporting electrical panels have been designed to reduce time to market by optimising procurement, production and logistics processes.