CCAC

- Zone 1, 2, 21, 22
- Group IIC
- Aluminium junction boxes
- Choice of 5 sizes
- IP66

Grub screws for opening lid

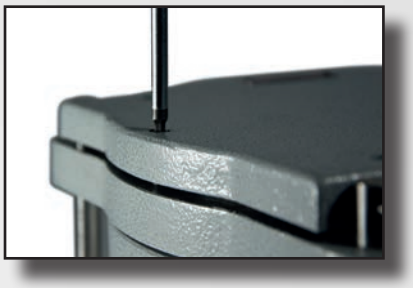

External earth screw in body

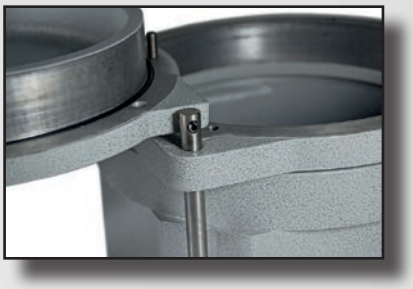

CCA...C series Aluminium junction boxes gas group IIC

The CCAC series junction boxes are recommended when using lid-mounted control and signalling devices. The special mechanical construction of the flamepath joint produced on the inside of the body makes them suitable for use in areas where group IIC gases are present in any environments where there is a risk of explosion and/or fire or where combustible dust is present, classified as Zone 1, 2, 21, 22. The quality of this product is recognized and valued the world over for its specific aluminium alloy and the mechanical properties of its finishes. The CCAC series is mostly used to produce control and signalling boards, light and power boards and motor starter boxes with different configurations, which are specially custom made to the requirements of our customers worldwide.

Cortem Group labels its products with a non-removable adhesive label featuring a hologram and an alphanumerical univocal code, as a safety measure against the illegal sale of fakes so that all the products are guaranteed as original. Non-compliance with the International standards entails serious risks for the environment, especially for those working daily on the plants.

Application sectors:

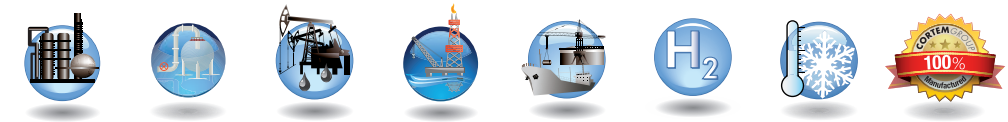

Oil refineries | Chemical and petrochemical plants | Onshore plants | Offshore plants | Oil loading/ offloading wharfs | Presence of hydrogen | Low temperatures | 100% Cortem product

CERTIFICATION DATA FOR EMPTY ENCLOSURES

Classification:	Group II	Category 2GD		
Installation: EN 60079.14	zone 1 - zone 2 (Gas)	zone 21 - zone 22 (Dust)		
Marking:	CE 0722 Ex II 2 GD - Ex db IIC Gb - Ex tb IIIC Db - IP66			
Certification:	ATEX CESI 01 ATEX 034U			
	IEC Ex CES 14.0012U	All IEC Ex, UKEX, TR CU certification data can be downloaded from www.cortemgroup.com		
	UKEX AVAILABLE			
	ECASEx AVAILABLE			
	TR CU AVAILABLE			
Standards:	CENELEC EN 60079-0: 2018, EN 60079-1: 2014, EN 60079-31: 2014, EN 60529: 1991 and EUROPEAN DIRECTIVE 2014/34/UE			
Ambient Temp.:	-20°C +60°C	Standard temperature on all CCA....C boxes.		
	-60°C +60°C	Special temperature.		
Degree of protection:	IP66			

CCA-...C series Aluminium junction boxes gas group IIC

CERTIFICATION DATA FOR ENCLOSURES WITH TERMINALS

Classification:	Group II	Category 2GD		
Installation: EN 60079.14	zone 1 - zone 2 (Gas)	zone 21 - zone 22 (Dust)		
Marking:	CE 0722 Ex II 2 GD - Ex d IIC T6, T5 Gb - Ex tb IIIC T85, T100°C Db - IP66			
Certification:	ATEX CESI 01 ATEX 036X			
	IEC Ex CES 16.0013X	All IEC Ex, TR CU, CCoE certification data can be downloaded from www.cortemgroup.com		
	TR CU AVAILABLE			
	CCoE AVAILABLE			
Standards:	CENELEC EN 60079-0: 2012 + A11: 2013, EN 60079-1: 2014, EN 60079-31: 2014, EN 60529: 1991 and EUROPEAN DIRECTIVE 2014/34/UE			
Ambient Temp.:	-50°C (-60°C) +40°C	With temperature class T6 and maximum surface temperature T85°C.		
	-50°C (-60°C) +55°C	With temperature class T5 and maximum surface temperature T100°C.		
Degree of protection:	IP66			

CERTIFICATION DATA OF ENCLOSURES FOR CONTROL, MONITORING AND SIGNALLING UNITS

Classification:	Group II	Category 2GD		
Installation: EN 60079.14	zone 1 - zone 2 (Gas)	zone 21 - zone 22 (Dust)		
Marking:	CE 0722 Ex II2GD - Ex db IIC T6, T5 Gb - Ex tb IIIC T85°C, T100°C Db - IP66			
Certification:	ATEX CESI 01 ATEX 036X			
	IEC Ex CES 16.0013X	All IEC Ex, TR CU , INMETRO certification data can be downloaded from www.cortemgroup.com		
	ECASEx AVAILABLE			
	INMETRO DNV 14.0152			
Standards:	CENELEC EN 60079-0: 2018, EN 60079-1: 2014, EN 60079-31: 2014, EN 60529: 1991 and EUROPEAN DIRECTIVE 2014/34/UE			
Ambient Temp.:	-20°C +40°C	With temperature class T6 and maximum surface temperature T85°C.		
	-20°C +55°C	With temperature class T5 and maximum surface temperature T100°C.		
	-60°C on request. (Use indicator light series M-0457AL, M-0457AL/3, M-0457IN or M-0457IN/3)			
Degree of protection:	IP66			

CERTIFICATION DATA FOR ENCLOSURES SERVING SURGE ARRESTER FUNCTION

Classification:	Group II	Category 2GD		
Installation: EN 60079.14	zone 1 - zone 2 (Gas)	zone 21 - zone 22 (Dust)		
Marking:	CE 0722 Ex II2GD - Ex db IIC T6, T5 Gb - Ex tb IIIC T85°C, T100°C Db - IP66			
Certification:	ATEX CESI 01 ATEX 036X			
	IEC Ex CES 16.0013X	All IEC Ex, TR CU certification data can be downloaded from www.cortemgroup.com		
	TR CU AVAILABLE			
Standards:	CENELEC EN 60079-0: 2018, EN 60079-1: 2014, EN 60079-31: 2014, EN 60529: 1991 and EUROPEAN DIRECTIVE 2014/34/UE			
Ambient Temp.:	-20°C +40°C	With temperature class T6 and maximum surface temperature T85°C.		
	-20°C +55°C	With temperature class T5 and maximum surface temperature T100°C.		
	-60°C	On request.		
Degree of protection:	IP66			

CERTIFICATION DATA OF ENCLOSURES SERVING INTERFACE UNIT CONTROL AND MONITORING FUNCTION

Classification:	Group II	Category 2GD		
Installation: EN 60079.14	zone 1 - zone 2 (Gas)	zone 21 - zone 22 (Dust)		
Marking:	CE 0722 Ex II2(1)GD - Ex d [ia Ga] IIC T... Gb - Ex tb [ia Da] IIIC T...°C Db - IP66			
Certification:	ATEX CESI 03 ATEX 174X			
	IEC Ex CES 16.0015X	All IEC Ex, UKEX, TR CU certification data can be downloaded from www.cortemgroup.com		
	UKEX AVAILABLE			
	ECASEx AVAILABLE			
Standards:	CENELEC EN 60079-0: 2013, EN 60079-1: 2014, EN 60079-11: 2012, EN 60079-26: 2015, EN 60079-31: 2014 and EUROPEAN DIRECTIVE 2014/34/UE			
Ambient Temp.:	-20°C +40°C	With temperature class T6 and maximum surface temperature T85°C.		
	-20°C +55°C	With temperature class T5 and maximum surface temperature T100°C.		
	-60°C	On request.		
Degree of protection:	IP66			

CCA-...C series Aluminium junction boxes gas group IIC

MECHANICAL FEATURES

Body and lid:	Low copper content aluminium alloy. Lid fitted with hinges for body coupling system incorporating cylindrical joint.
Hinges:	Stainless steel
Gasket:	Silicone, located between body and lid
Certification label:	Adhesive label located inside on empty enclosures; aluminium label riveted onto body on other versions
Bolts and screws:	Stainless steel
Earth screws:	Stainless steel. On inside and outside of body complete with anti-rotation brackets
Mounting:	Cast aluminium lugs
Coating:	Polyester coating RAL 7035 (Light grey)
Corrosion Resistance:	The STANDARD of the aluminium alloy used by Cortem has passed the tests required by standards EN 60068-2-30 (hot/humid cycles) and EN 60068-2-11 (salt mist tests)

ACCESSORIES AVAILABLE ON REQUEST/ SPECIAL REQUESTS

Internal anti-condensation coating RAL 2004 (pure orange)
Possible drilling of the enclosure bottom
Breather valve Code ECD-210S
Drain valve Code ECD-210S
External polyester coatings in different colour
Internal mounting plate: 2.5mm-thick aluminium (code TF-...E). See accessories section
2.5mm-thick electrogalvanized steel (code TF-...EAC)

Thread options:

- NPT threads ANSI B1.20.1
- GAS UNI ISO 7-1 thread
- Metric threads ISO 261/965

Cortem manufactures any type of custom-made products according to customer specifications and in compliance with the certification data.

ENCLOSURE SELECTION CHART

Code	Outside dimensions				Inside dimensions							Mounting			Weight
	A	B	C	D	a	b	c	Ød1	d2	s	s1	E	F	ØG	Kg
CCA-0C	128	128	150	146	104	104	122	M130x2	95	12	12	111	142	9	3,3
CCA-01C	145	145	149	170	121	121	113	M150x2	112	12	12	128	150	9	4,0
CCA-02C	195	195	160	212	171	171	130	M200x3	162	12	12	175	175	10	6,8
CCA-03C	240	240	223	260	216	216	185	M250x3	204	12	16	213	213	12	11,7
CCA-04C	385	385	262	410	353	353	200	M390x3	358	16	24	339	339	14	32,2

DIMENSIONAL DRAWING

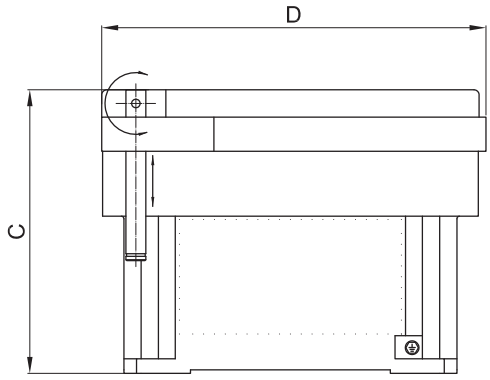

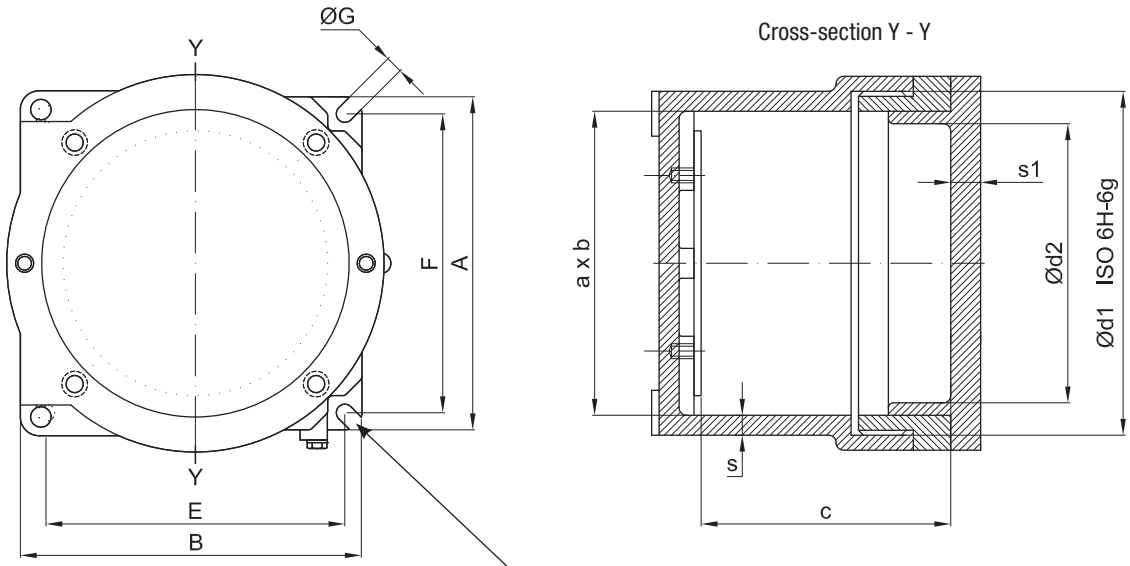

Dimensions in mm

2 lugs for CCA-0C, CCA-01C
4 lugs for CCA-02C, CCA-03C and CCA-04C

CCA-...C series Body drilling data

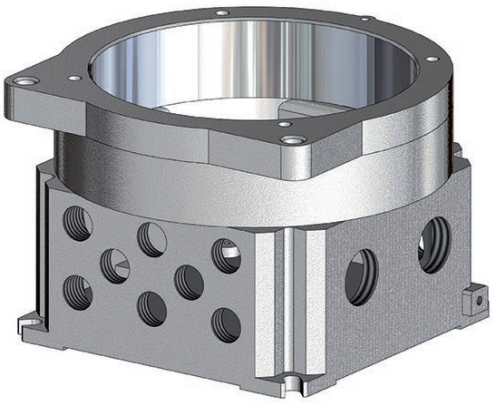

THREAD COMPARISON CHART									
ISO 7-1	1/2"	3/4"	1"	1 1/4"	1 1/2"	2"	2 1/2"	3"	4"
ANSI B.20.1 NPT	1/2"	3/4"	1"	1 1/4"	1 1/2"	2"			
ISO 261/965	20x1.5	25x1.5	32x1.5	40x1.5	50x1.5	63x1.5	75x1.5	90x1.5	100x1,5
D Thread diameter	**1**	**2**	**3**	**4**	**5**	**6**	**7**	**8**	**10**

As required by the current standard, holes can be drilled by Cortem or by authorized partners who hold a production notification in accordance with ATEX Directive .

TYPE OF ENCLOSURE	HOLE DRILLING IN BODY									
	One side									
	Drilling area mm	MAXIMUM QUANTITY PER HOLE TYPE								
		1	2	3	4	5	6	7	8	10
CCA-0C	97x65	6	4	2	1	1	1	-	-	-
CCA-01C	108x65	6	4	3	2	1	1	-	-	-
CCA-02C	130x65	8	6	3	2	2	2	-	-	-
CCA-03C	155x115	12	12	6	6	4	2	1	1	1
CCA-04C	243x140	28	22	15	12	8	6	3	2	2

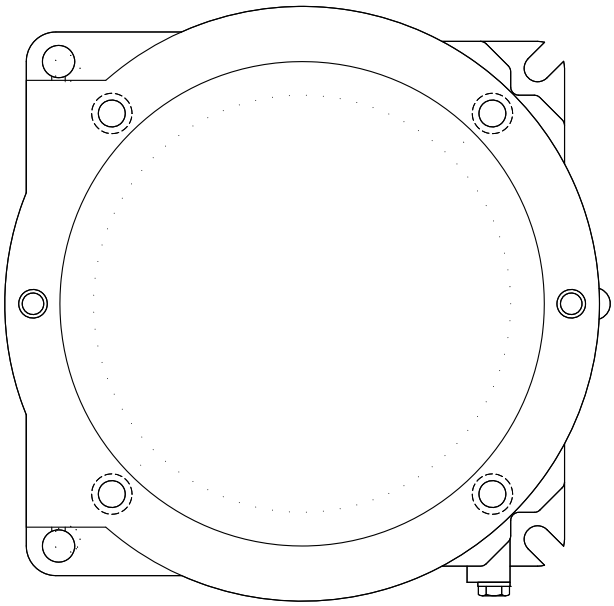

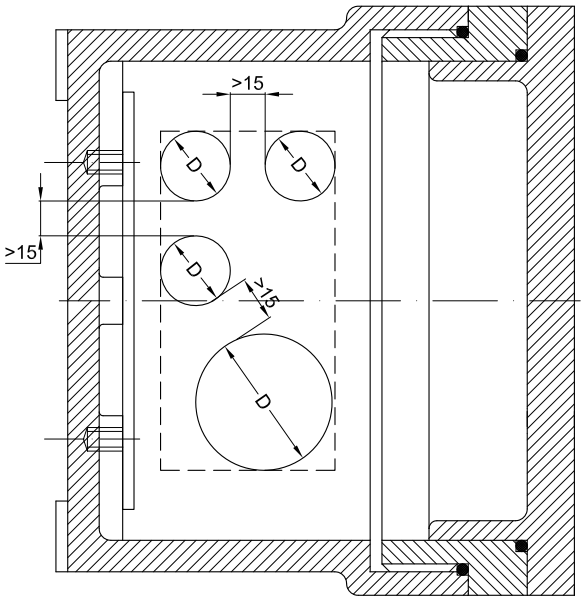

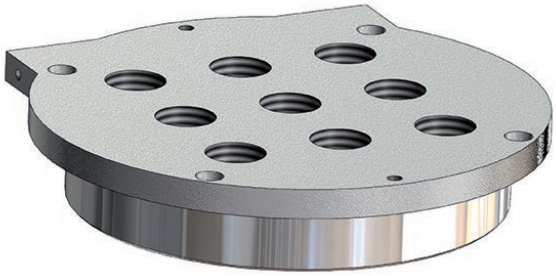

THREAD COMPARISON CHART								
D1	ISO 228	G 3/8"	G 1/2"	G 3/4"	-	-	-	-
	ISO 261/965	M16x1.5	M20x1.5	M25x1.5	M32x1.5	M35x1.5	M40x1.5	M42x1.5

TYPE OF ENCLOSURE	HOLE DRILLING IN LID				
	ØD	MAXIMUM QUANTITY PER HOLE TYPE			
		3/8"	1/2"	3/4"	M32
CCA-0C	85	3	3	2	2
CCA-01C	105	3	3	3	3
CCA-02C	155	6	6	6	5
CCA-03C	200	9	9	9	9
CCA-04C	320	18	18	18	18

Notes:

- Standard holes refer to mounting of Cortem control and signalling devices.
- 3/8" Ø holes for Cortem std. side-mounted handles centre-to-centre distance >70mm.
- 1/2" Ø holes for Cortem std. heavy-duty series side-mounted handles centre-to-centre distance >120mm.

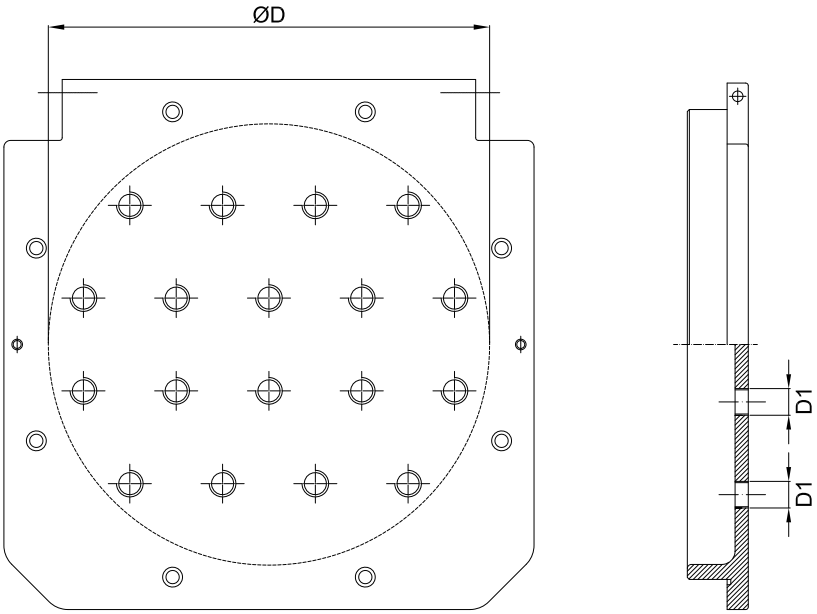

These enclosures are customized based on size, on the number of terminals or cables they are due to accommodate, or taking into account the number of cable entries and cabling requirements inside a system. Hence we can produce tailor-made solutions as long as you provide us with the appropriate parameters required at the quote request stage, such as the number of cable glands, unions or sealing fittings to be installed, so that we can determine the most suitable size of enclosure. All terminals can be fitted with your requested accessories and mounted on special rails that are fastened to the enclosure's internal mounting frames. Terminal strips can be arranged in various ways, as specified by the customer and always within the limits allowed by the certificate. The options are vertical, horizontal, in a number of rows, or on different levels using suitable spacers.

ELECTRICAL FEATURES

Rated voltage: 24 / 800 V
Rated frequency: 50 / 60 Hz

Modular terminals
Terminal cross-sectional area: 2.5; 4; 6; 10; 16; 25; 35; 70; 95; 120; 185; 240 [mm^2]
Rated current: 12.5 - 400 [A]
Max. current density: 1.65 - 7 [A/mm^2]

Multi-pole terminals
Terminal cross-sectional area: 3x16; 4x16; 3x25; 4x25; 3x40; 3x40; 4x40; 3x70; 4x70; 3x125; 3x200; 4x200; 3x315 [mm^2]
Rated current: 48 - 252 [A]
Max. current density: 0.8 - 3 [A/mm^2]

ATEX - IECEx label for terminal enclosures

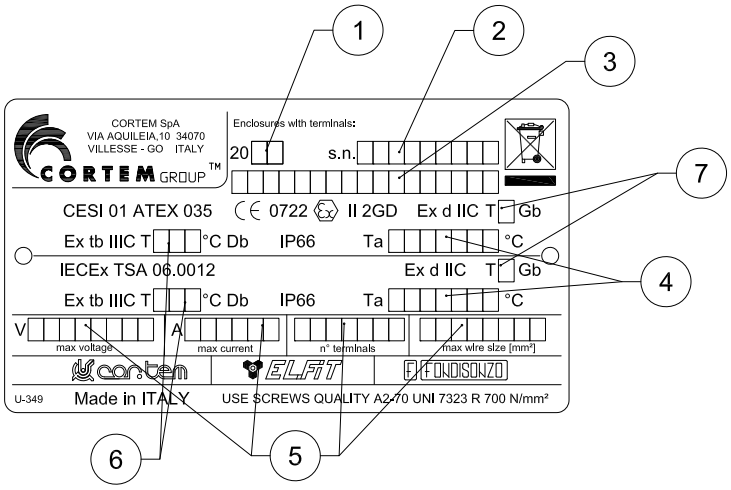

Data filled in:
1. year of manufacture
2. serial number
3. product code
4. ambient temperature
5. electrical specs
6. maximum surface temperature
7. temperature class

Examples of terminal strips with minimum installation distances

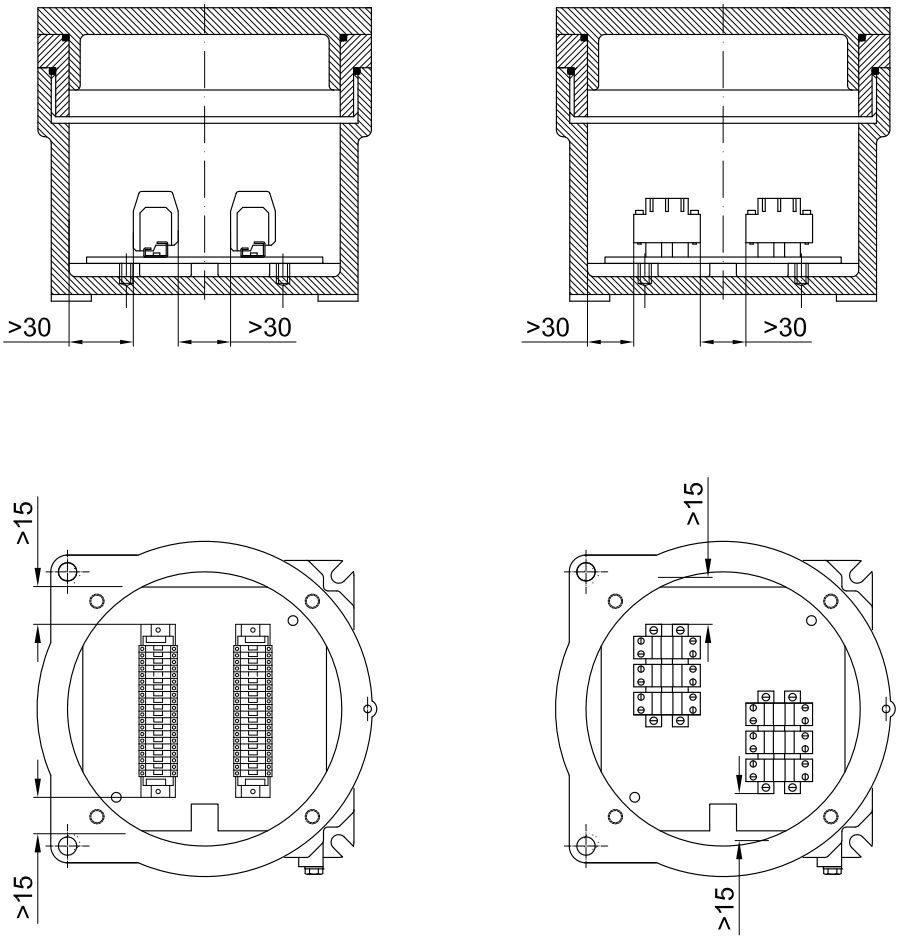

TYPE OF ENCLOSURE	MAXIMUM NUMBER OF TERMINALS HOUSED								
	TERMINAL CROSS-SECTIONAL AREA								
	2.5	4	6	10	16	35	70	120	185
CCA-0C	13	12	8	7	6	-	-	-	-
CCA-01C	17	14	11	9	7	5	-	-	-
CCA-02C	2x22	2x19	2x15	2x12	2x10	6	-	-	-
CCA-03C	2x32	2x27	2x22	2x17	2x14	8	-	-	-
CCA-04C	3x40	3x30	2x28	2x23	2x18	12	10	6	4

Eg. 2x22= 2 rows of 22 terminals (total 44 terminals). The maximum number of standard terminals refers to CABUR terminals

Features of junction boxes for control, monitoring and signalling units

Control, monitoring and signalling units are used to produce control boards that, when positioned near the electrical equipment being controlled, enable the electrical system to operate correctly and guarantee the safety of personnel when maintenance is being performed on the system. Because they are fitted with a Manual/Automatic selector, they allow operators to select the appropriate conditions to enable work to be performed entirely safely. They offer protection and control for electrical equipment and control circuits located in explosion hazard areas and in particularly aggressive environments. They are used to hold electrical equipment, such as switches, indicators, contactors, transformers, analogue and digital components, etc.... with the option of external control by using lid-mounted Cortem control and signalling devices, such as control levers, pushbuttons, indicator lights, etc.... Cortem designs, develops and supplies full cabling for one or more enclosures tailored to your specific requirements, producing panel boards - including even extremely complex solutions - and providing a full inspection and testing service on request.

ELECTRICAL FEATURES

Rated voltage: 24 / 1000 Vac 12 / 250 Vdc
Max. current on contacts: 650 A
Rated frequency: 50 / 60Hz
Max. wattage for lamps: 5W (for Ta +40°C)
3W (for Ta +55°C)

Features of equipment that can be installed inside enclosures to produce control and monitoring units.

Table of standard electrical features of components that can be installed in enclosures to produce control, monitoring and signalling units.
(The values refer to the catalogues of the leading manufacturers of electrical/electronic components available on the market)

COMPONENT TYPE	Max. V (Volts)	Max. I (Amperes)	Max. power (Watts)
Analogue and digital instruments	660	5	10
Electronic inverters/reactors	400	-	10
PLCs Multiplexers and amplifiers	240	-	80
Testing and measuring devices	240	-	100
Circuit breakers	660	650	-
Fuses	660	400	-
Relays	500	10	12
Electronic control devices	660	-	100
Contactors	660	650	30
Timers	240	10	5
Twilight relays	240	-	2
Capacitors	660	-	-
Transformers	660	-	200
Resistors	240	-	300
Terminals	660	-	-
Reactors	277	7.5	40

Minimum air gap between components

Component voltage (V ac)	Min. air gap (mm)
60 - 250	6
250 - 380	8
380 - 500	10
500 - 660	12
660 - 1000	20
Component voltage (V dc)	**Min. air gap (mm)**
12 - 250	6

Table with maximum power dissipation values for CCA-...C series enclosures.

The temperature classes and maximum surface temperatures of control and monitoring unit enclosures depend on the size of the enclosure, ambient temperature and power dissipation inside the enclosure.

Enclosure type	Maximum power dissipation (Watts) with ambient temperature of **+40°C**		
	T6 class without indicator lights. Only indicator LEDs are allowed	T5 class with indicator lights and/or LEDs	T5 class without indicator lights. Only indicator LEDs are allowed
CCA-0C	8	9	13
CCA-01C	11	12	17
CCA-02C	23	25	36
CCA-03C	40	44	58
CCA-04C	93	100	164

Enclosure type	Maximum power dissipation (Watts) with ambient temperature of **+55°C**		
	T6 class without indicator lights. Only indicator LEDs are allowed	T5 class with indicator lights and/or LEDs	T5 class without indicator lights. Only indicator LEDs are allowed
CCA-0C	6	7	9
CCA-01C	9	10	13
CCA-02C	20	22	28
CCA-03C	29	32	43
CCA-04C	70	77	125

ELECTRICAL FEATURES

Rated voltage: 24 / 1000 Vac 12 / 250 Vdc
Max. current on contacts and fuses: 400 A
Rated frequency: 50 / 60Hz
Max. wattage for lamps: 5W (for Ta +40°C)
3W (for Ta +55°C)

GENERAL INSTALLATION INFORMATION

The maximum power dissipation inside the enclosure depends on the maximum current on contacts and fuses, the size of the enclosure, the temperature class (or maximum surface temperature for 2GD category) and ambient temperature, as specified in the maximum power dissipation tables (see previous page).
The maximum power dissipation must not exceed the values given in the table when non-'Ex i' components and 'Ex i' components (with 1.1W maximum power dissipation) are installed together.
The maximum power dissipation possible inside the enclosure will also depend on the maximum power dissipation of terminals, contacts and cables; whatever the case, the current density value allowed in the enclosure is prescribed by EN 60439-1, IEC 60439-1.

Details of barrier mounting inside enclosures

The "omega" rail, in accordance with EN 60079-11, is suitable for mounting barriers inside 'Ex d' enclosures.
Barriers are mounted (according to the manufacturer's directions) 7.5 mm away from the base of the enclosure and are secured to the DIN rail with 2 earth terminals (nominal cross-sectional area 6-10 mm) and 2 standard terminals for omega rails (EN 60079-11).
Up to how many barriers can be installed in the enclosures will depend on the properties of the barriers in question; in addition, the maximum number of barriers must not exceed the limit allowed by the certificate in any case.

Associated equipment can also be mounted on a DIN rail; when it is mounted on the enclosure's internal mounting plate, reference must be made to the minimum prescribed distances. Whether mounted on a rail or mounting plate, associated equipment must meet the following requirements:

Separators

When separators are used, they must be appropriately sized; their thickness and fastening inside the enclosure must be suitably determined and separators must allow air to circulate inside the enclosure.

Incoming cables

Incoming cables for 'Ex i' circuits must be suitably labelled or the area around the entry must be coloured blue RAL 5015. 'Ex i' entries must be clearly identified.

Installation of 'Ex i' and non-'Ex i' components inside the enclosure.

Ex d IIC certified enclosures complete with accessories can contain only Ex ia IIC associated equipment. In this case, the resulting version becomes Ex d [ia] IIC.

Connection of internal cables

Cables are connected inside the enclosure to the barriers in accordance with EN 60079-11, with one side for connecting 'Ex i' cables and the opposite side for connecting non-'Ex i' cables.
Connection in 'Ex i' circuits must be made using insulated cables only; there must be no connections to non-'Ex i' circuits and no more than one cable can be connected to a single terminal. 'Ex i' cables cannot be grouped together with non-'Ex i' cables. In addition, 'Ex i' cables and non-'Ex i' cables must be kept separate. The minimum distance between the 2 types of cables must be 8 mm. The minimum insulation level for non-'Ex i' cables must be greater than 1.5 kV; the minimum insulation level for 'Ex i' cables must be greater than 0.5 kV.

Internal connections

When routing cables belonging to 'Ex i' circuits, the cables must be identified in one of the following ways:

- cables must have blue insulation (as long as there are no other cables inside the enclosure with this colour).
- 'Ex i' cables must be kept separate from non-'Ex i' cables with blue cable raceways.
- 'Ex i' cables must be grouped together, using a tie, for example, and the area identified with a blue label.

Warning 'Ex i' circuits

- cables for power circuits must have a cross-sectional area of at least 1.5 mm^2.
- 'Ex i' circuits must be kept at a distance of 50 mm from non-'Ex i' circuits.
- the earth connection must meet European standard EN 60079-14.

The number of items of equipment mounted inside the enclosures and their layout will vary based on the following:

- in accordance with standards EN 60079-1 and IEC 60079-1, the equipment contained inside the enclosure can be arranged in any way provided that at least 20% of the surface area of each section is left free.
- equipment must be set at a suitable distance to accommodate cable wiring.

Example of interface unit without separator

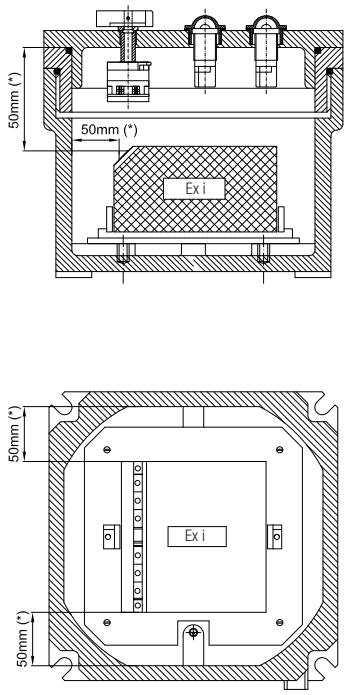

Example of interface unit (with associated equipment) complete with separator

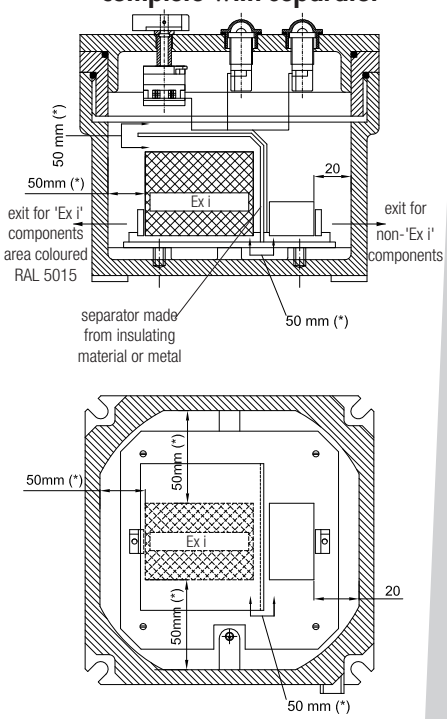

Examples of installation of associated equipment - minimum distances.

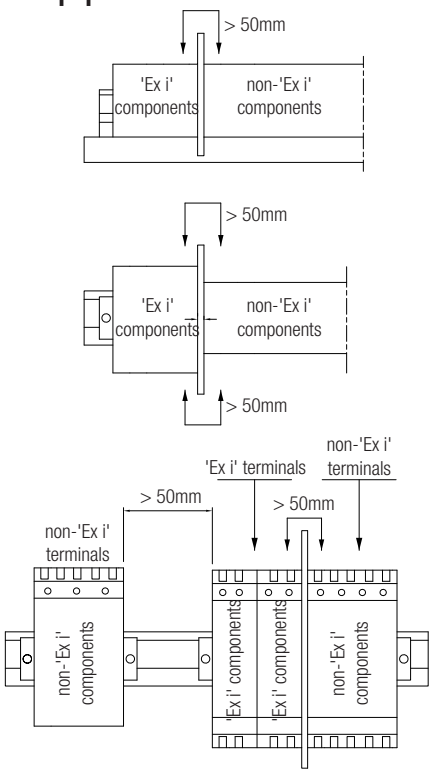

NOTES

(*) 50 mm is the minimum safe distance between 'Ex i' components and non-'Ex i' components (and/or conducting parts).

- The active and passive barriers that can be installed in the enclosures must have their own ATEX certificate.
- The maximum voltage entering barriers on non-'Ex i' circuits must be less than 250 V.

CCA-...C series Accessories available on request and spare parts

ILLUSTRATION	DESCRIPTION	MODEL	FEATURES	CODE	KEY
	Internal mounting plates	CCA-0C	Thickness 2.5mm Aluminium (BFE-...) Galvanized steel (BFE-...AC)	TF-0E	ACCESSORY SPARE PART
		CCA-01C		TF-01E	
		CCA-02C		TF-02E	
		CCA-03C		TF-03E	
		CCA-04C		TF-04E	
	Breather and drain valve	thread Ø ISO 7-R 3/8"	Material: stainless steel	ECD-210S	ACCESSORY SPARE PART
	Cable glands and unions		For models and codes, visit www.cortemgroup.com		ACCESSORY SPARE PART
	Lid-mounted control and signalling devices		For control and signalling device models and codes, see control and monitoring device chapter		ACCESSORY SPARE PART

Enclosures	Internal mounting plates				
	A	B	a	b	Code
CCA-0C	100	100	80	60	TF-0E
CCA-01C	113	113	90	90	TF-01E
CCA-02C	150	150	120	120	TF-02E
CCA-03C	200	200	145	145	TF-03E
CCA-04C	270	270	230	230	TF-04E

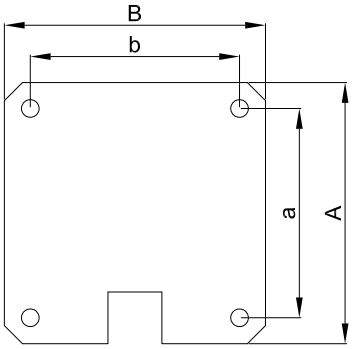

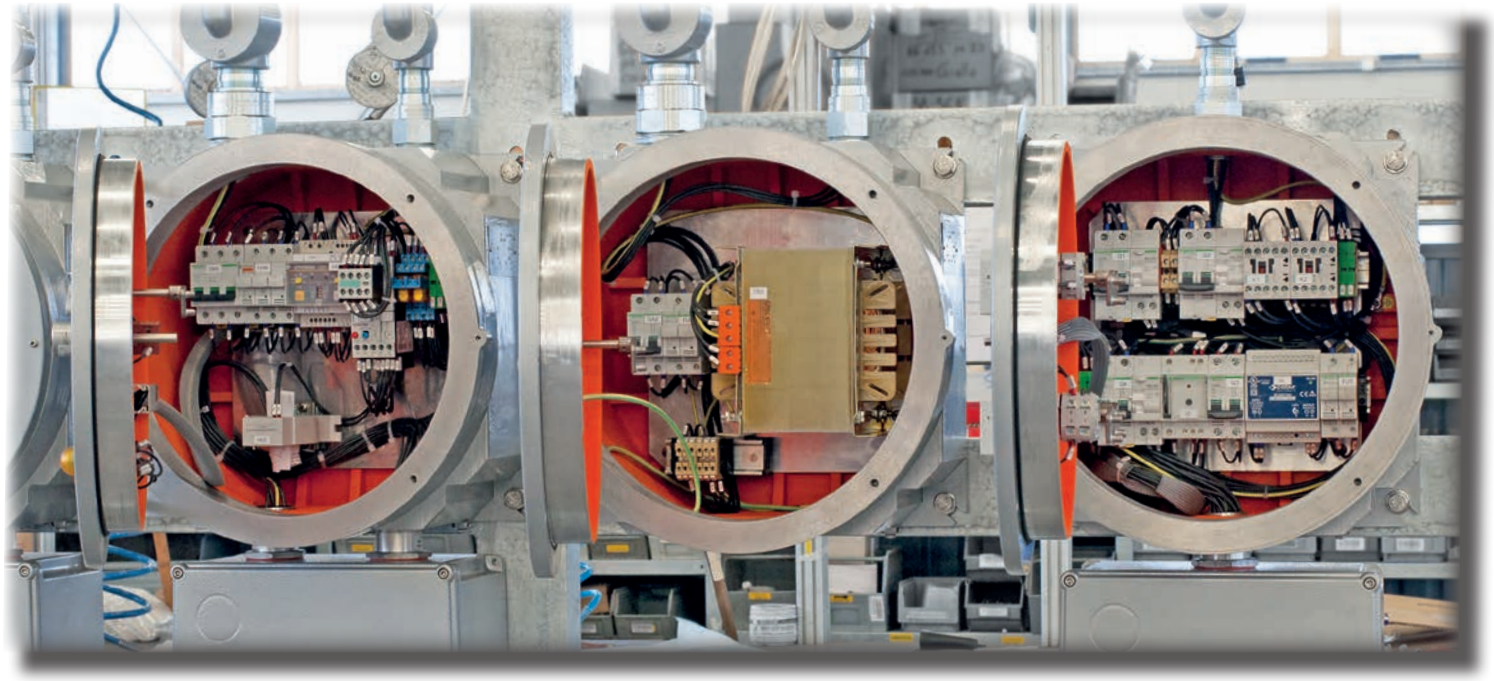

Example of control panel with wall-mounting system.

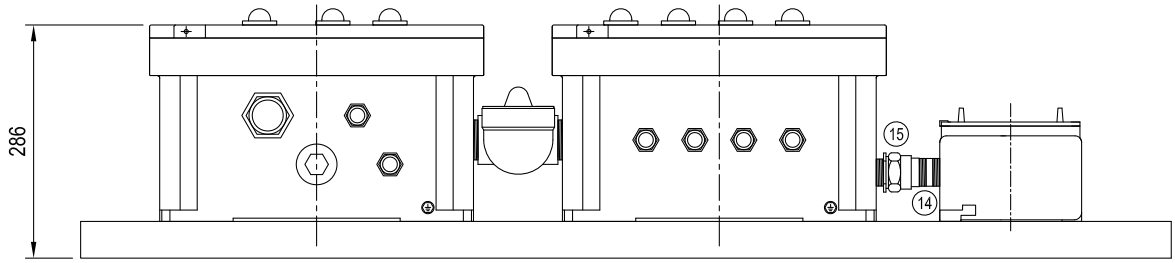

External layout

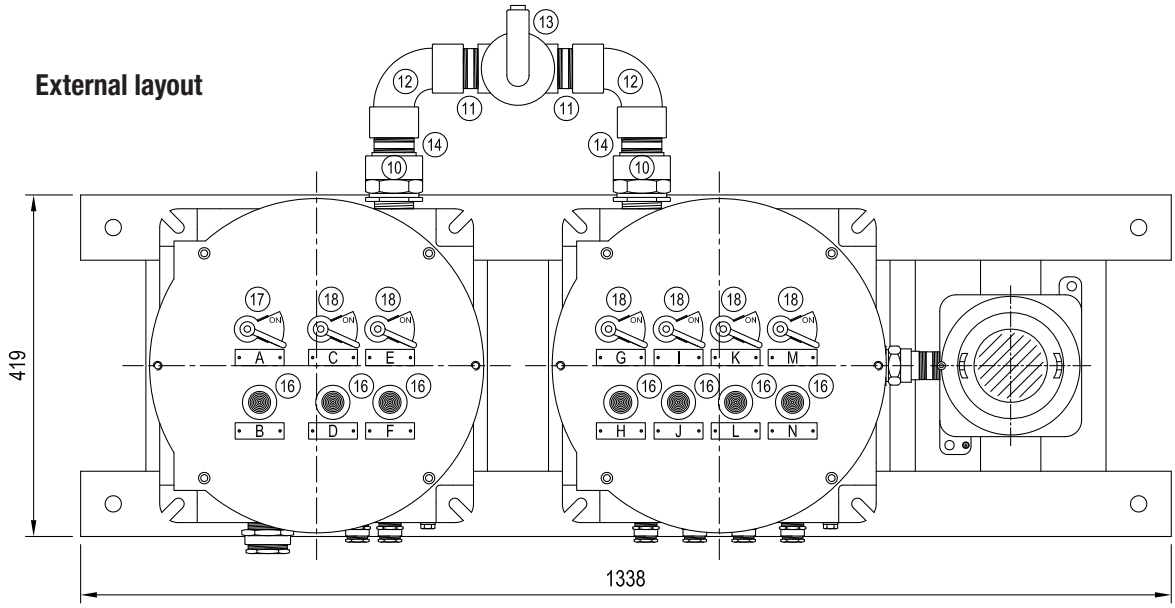

Internal layout

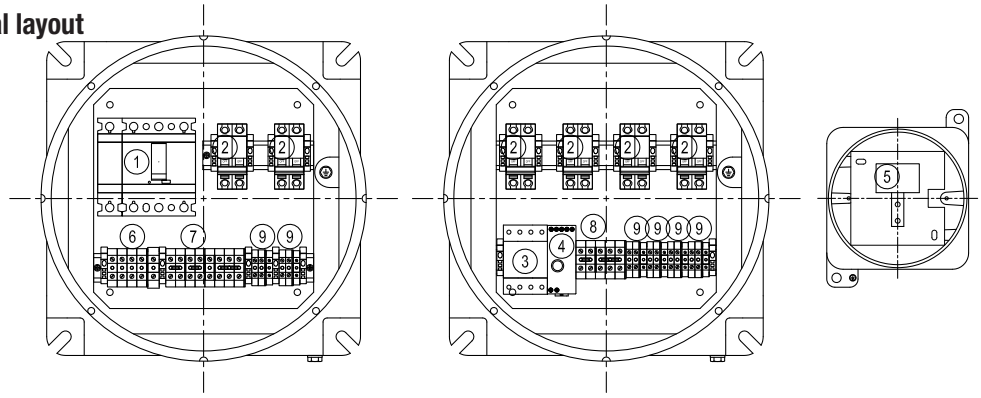

N°	Qty.	Equipment
1	1	front fixed circuit breaker 4P TM16D
2	6	circuit breaker C60N 2P 25A C curve
3	1	contactor CT 3P 3NA 25A 230V control
4-5	1	230V modular twilight relay
6	x1	4 x CBD16 1 x TE160
7	x1	8 x CBD16
8	x1	5 x CBD16

N°	Qty.	Equipment
9	x6	2 x CBD2 1 x TE60
10	2	RMF5G
11	4	NP5G
12	2	ELF5
13	1	EZS5
14	1	NPSF-3
15	1	RMF3G
16	x7	M-0457/R
17	1	M-0435/V
18	6	M-0436/V