Cable gland series NEV for armoured cables from ¼" to 4"

ELFiT® ELectrical FITtings

NEV series cable glands are suitable for use in areas with the risk of explosion, allowing the direct insertion of armoured cables in explosion proof enclosures. They are supplied with a sealing ring which is stretched over the cable at the inlet ensuring the anti-loosening, 'Ex d' execution, and a second compression ring which is stretched over the cable armour at the outlet to guarantee an IP 66/68 protection rating. The result is a cable gland which provides maximum performance in terms of reliability and safety over time, is compatible with a wide range of the main, commercially available cables, and complies with the most recent applicable regulations. Their structure makes them suitable for environments which are particularly difficult, such as marine environments, or where there are subjected to the mechanical stresses and impacts which often occur in heavy industry, where safety is the utmost priority.

See Video with assembly instructions for NEV.. (light armoured)

See Video with assembly instructions for NEV.. (heavy armoured)

Classification: 2014/34/EU	Group II	Category 2GD/3G
Installation: EN 60079.14	zone 1 - zone 2 (Gas)	zone 21 - zone 22 (Dust)
Marking:	CE 0722 Ex II 2 GD - Ex db IIC Gb - Ex eb IIC Gb II 2 D - Ex tb IIIC Db II 3G Ex nR IIC Gc - IP66/68	
Certification:	ATEX (category 2): IMQ 17 ATEX 016X ATEX (category 3): IMQ 17 ATEX 017X IEC Ex IECEx IMQ 17.0010X	For IEC Ex and others certifications data can be downloaded at www.elfit.com
Standards:	CENELEC EN 60079-0: 2018, EN 60079-1: 2014, EN 60079-7: 2015, EN 60079-15: 2019, EN 60079-31: 2014 and EUROPEAN DIRECTIVE 2014/34/EU IEC60079-0: 2017, IEC60079-1: 2014, IEC60079-7: 2017, IEC60079-15: 2017, IEC60079-31: 2013 RoHS Directive 2002/95/EC	
Operating temperature:	-60 °C +130 °C	
Protection rating:	IP66/68 *(30 meters - 12 hours)*	
Design	BS 6121: Part 1:1989, IEC 62444, EN 62444	

Certificates are available on www.elfit.com

ACCESSORIES UPON REQUEST

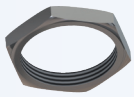

Locknuts	Nickel-plated brass	Galvanized steel	Stainless steel
M12x1,5	**DL02IB**	**DL02IG**	**DL02IS**
M16x1,5	**DL01IB**	**DL01IG**	**DL01IS**
M20x1,5	**DL1IB**	**DL1IG**	**DL1IS**
M25x1,5	**DL2IB**	**DL2IG**	**DL2IS**
M32x1,5	**DL3IB**	**DL3IG**	**DL3IS**
M40x1,5	**DL4IB**	**DL4IG**	**DL4IS**
M50x1,5	**DL5IB**	**DL5IG**	**DL5IS**
M63x1,5	**DL6IB**	**DL6IG**	**DL6IS**
M75x1,5	**DL7IB**	**DL7IG**	**DL7IS**
M90x1,5	**DL8IB**	**DL8IG**	**DL8IS**
M100x1,5	**DL10IB**	**DL10IG**	**DL10IS**
M115x1,5	**DL115IB**	**DL115IG**	**DL115IS**

Sealing ring for flat/healing cables

Code and dimensions are in the page p. B.18

Nickel-plated brass earthing rings	ISO thread	Nickel-plated brass	Stainless steel
	M12x1,5	**A0231IB**	**A0231IS**
	M16x1,5	**A0131IB**	**A0131IS**
	M20x1,5	**A131IB**	**A131IS**
	M25x1,5	**A231IB**	**A231IS**
	M32x1,5	**A331IB**	**A331IS**
	M40x1,5	**A431IB**	**A431IS**
	M50x1,5	**A531IB**	**A531IS**
	M63x1,5	**A631IB**	**A631IS**
	M75x1,5	**A731IB**	**A731IS**
	M90x1,5	**A831IB**	**A831IS**
	M100x1,5	**A1031IB**	**A1031IS**
	M115x1,5	**A1031B**	**A1031S**

Serrated steinless steel lock washers	Code
	RDI02IS/A4
	RDI01IS/A4
	RDI1IS/A4
	RDI2IS/A4
	RDI3IS/A4
	RDI4IS/A4
	RDI5IS/A4
	RDI6IS/A4

Adapters and reducers of the **RE...** series

Black TPV protector	Cableglands		Code
	NEV01NB	NEV16IB	**PGA1F**
	NEV1SNB	NEV20SIB	**PGA1N**
	NEV1NB	NEV20IB	**PGA1**
	NEV2NB	NEV25IB	**PGA2N**
	NEV3NB	NEV32IB	**PGA4**
	NEV4NB	NEV40IB	**PGA4**
	NEV5SNB	NEV50SIB	**PGA5**
	NEV5NB	NEV50IB	**PGA5N**
	NEV6SNB	NEV63SIB	**PGA6**
	NEV6NB	NEV63IB	**PGA7**
	NEV7SNB	NEV75SIB	**GTR7** Heat shrinkable
	NEV7NB	NEV75IB	
	NEV8NB	NEV90IB	
	NEV9NB	NEV100IB	
	NEV10NB	NEV115IB	

* For different threads, contact the sales department.

CORTEM GROUP®

ED.2024

vendite@elfit.com info@elfit.com
www.elfit.com

Cable gland series NEV for armoured cables from ¼" to 4"

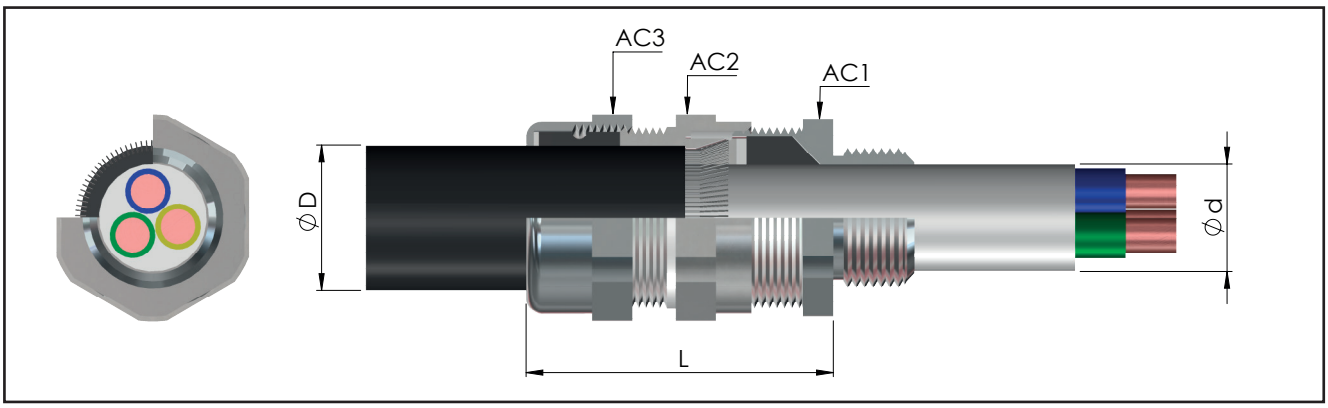

CABLE GLAND SELECTION TABLE

Code Nickel-plated brass	Thread	Code Nickel-plated brass	Thread	Dimensions in mm AC1	AC2	AC3	L	Range Ød min-max (Internal cable sheath)	ØD min-max (Outer sheath of the cable)	Armour thickness	Weight Kg
NEV02NB	1/4" NPT	**NEV12IB**	M12x1,5	18	18	18	58	3.0 - 6.0	6 - 10.0	0.2 - 1.3	0,100
NEV01NB	3/8" NPT	**NEV16IB**	M16x1,5	24	24	24	59	3.5 - 8.6	6 - 13.2	0.2 - 1.3	0,145
NEV1SNB	1/2" NPT	**NEV20SIB**	M20x1,5	24	26	26	59	6.3 - 11.6	9.5 - 16	0.2 - 1.3	0,157
NEV1NB	1/2" NPT	**NEV20IB**	M20x1,5	30	32	32	61	6.5 - 14	12.5 - 21	0.2 - 1.4	0,215
NEV2NB	3/4" NPT	**NEV25IB**	M25x1,5	36	38	38	61	11 - 20	20 - 27.5	0.2 - 1.6	0,261
NEV3NB	1" NPT	**NEV32IB**	M32x1,5	45	47	47	72	17 - 27	23.5 - 34	0.2 - 2.0	0,433
NEV4NB	1 ¼" NPT	**NEV40IB**	M40x1,5	50	52	52	73	22 - 32	26 - 40	0.2 - 2.2	0,514
NEV5SNB	1 ½" NPT	**NEV50SIB**	M50x1,5	55	57	57	80	29.5 - 38	35 - 46.5	0.2 - 2.5	0,610
NEV5NB	2" NPT	**NEV50IB**	M50x1,5	62/60*	62	62	81	35.5 - 44	38 - 53	0.2 - 2.5	0,562
NEV6SNB	2" NPT	**NEV63SIB**	M63x1,5	68	75	77	91	40 - 50	45.5 - 59.5	0.2 - 2.5	1,151
NEV6NB	2 ½" NPT	**NEV63IB**	M63x1,5	75/73*	80	82	93	47 - 56	54.5 - 66	0.2 - 2.5	1,100
NEV7SNB	2 ½" NPT	**NEV75SIB**	M75x1,5	80	85	90	97	53 - 62	57 - 72	0.2 - 2.8	1,308
NEV7NB	3" NPT	**NEV75IB**	M75x1,5	90/85*	95	100	99	59 - 68	66.5 - 78.5	0.2 - 2.8	1,538
NEV8NB	3" NPT	**NEV90IB**	M90x1,5	100	105	110	104	66 - 79	76.5 - 90	0.2 - 2.8	2,000
NEV9NB	3 ½" NPT	**NEV100IB**	M100x1,5	115	120	120	111	76 - 91	86 - 101	0.2 - 3.3	2,381
NEV10NB	4" NPT	**NEV115IB**	M115x1,5	120	125	130	112	86 - 98	100 - 110	0.2 - 3.5	2,783

** Dimensions with threaded: NPT / ISO*

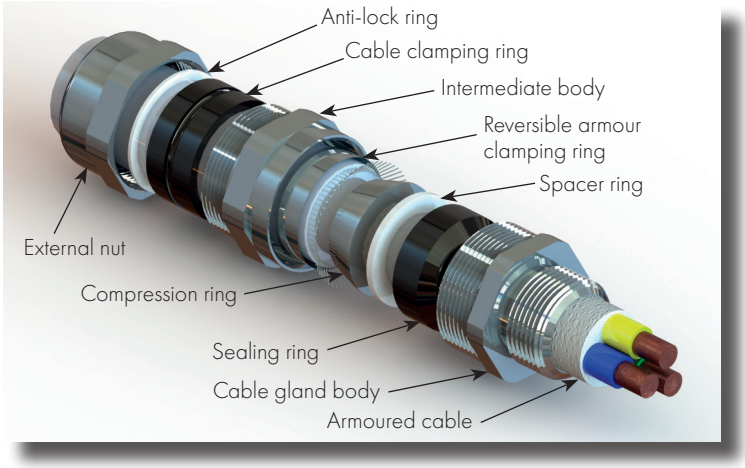

Sample order code

NEV	6	N	B
MODEL	SIZE	THREAD	MATERIAL

TECHNICAL NOTES:

- *Silicone o-rings are supplied for cylindrical threads (ISO metric) for the pre-assembled IP seal on the cable gland*
- *The ISO7/1 thread version is available upon request (sample code NEV1B)*
- *Also available in stainless steel AISI 316 (sample code NEV1**S**)*
- *Other materials on request*
- *For "Ex i" intrinsic safety version, RAL 5015 blue nut (sample code NEV1S**IA**)*
- *Internal ring for armoured cables with larger cross-section*