Cable gland series NEVL for lead sheathed armoured cables

NEVL series cable glands are suitable for use in areas with the risk of explosion, allowing the direct insertion of armoured cables in explosion proof enclosures and the installation of lead sheathed cables. They are supplied with a sealing ring which is stretched over the cable at the inlet ensuring the anti-loosening, 'Ex d' execution, and a second compression ring which is stretched over the cable armour at the outlet to guarantee an IP 66/68 protection rating, and a metal ring which affixes to the outer surface of the lead sheath as it is wound, fastening it in place. Their structure makes them suitable for environments which are particularly difficult, such as marine environments, or where there are subjected to the mechanical stresses and impacts which often occur in heavy industry, where safety is the utmost priority.

Safety, use and maintenance instructions

Classification: 2014/34/EU	Group II	Category 2GD/3G
Installation: EN 60079.14	zone 1 - zone 2 (Gas)	zone 21 - zone 22 (Dust)
Marking:	CE 0722 Ex II 2 GD - Ex db IIC Gb - Ex eb IIC Gb II 2 D - Ex tb IIIC Db II 3G Ex nR IIC Gc - IP66/68	
Certification:	ATEX (category 2): IMQ 17 ATEX 016X	
	ATEX (category 3): IMQ 17 ATEX 017X	
	IEC Ex IECEx IMQ 17.0010X	IEC Ex certification data can be downloaded at www.elfit.com
Standards:	CENELEC EN 60079-0: 2012+A11:2013, EN 60079-1: 2016, EN 60079-7: 2015, EN 60079-15: 2012, EN 60079-31: 2015 and EUROPEAN DIRECTIVE 2014/34/EU IEC60079-0: 2011 IEC60079-1: 2014 IEC60079-7: 2015 IEC60079-15: 2015 IEC60079-31: 2013 RoHS Directive 2002/95/EC	
Operating temperature:	-60 °C +130 °C	
Protection rating:	IP66/68 *(30 meters - 12 hours)*	
Design	BS 6121: Part 1:1989, IEC 62444, EN 62444	

Certificates are available on www.elfit.com

ACCESSORIES UPON REQUEST

Locknuts	ISO thread	Nickel-plated brass	Galvanized steel	Stainless steel	Sealing ring for flat/ healing cables
	M12x1,5	**DL02IB**	**DL02IG**	**DL02IS**	
	M16x1,5	**DL01IB**	**DL01IG**	**DL01IS**	
	M20x1,5	**DL1IB**	**DL1IG**	**DL1IS**	
	M25x1,5	**DL2IB**	**DL2IG**	**DL2IS**	
	M32x1,5	**DL3IB**	**DL3IG**	**DL3IS**	
	M40x1,5	**DL4IB**	**DL4IG**	**DL4IS**	
	M50x1,5	**DL5IB**	**DL5IG**	**DL5IS**	
	M63x1,5	**DL6IB**	**DL6IG**	**DL6IS**	
	M75x1,5	**DL7IB**	**DL7IG**	**DL7IS**	
	M90x1,5	**DL8IB**	**DL8IG**	**DL8IS**	Code and dimensions are in the page pagina A.16
	M100x1,5	**DL10IB**	**DL10IG**	**DL10IS**	
	M115x1,5	**DL115IB**	**DL115IG**	**DL115IS**	

Nickel-plated brass earthing rings	ISO thread	Nickel-plated brass	Stainless steel	Serrated steinless steel lock washers	Code	Adapters and reducers of the **RE...** series
	M12x1,5	**A0231IB**	**A0231IS**		**RDI02IS/A4**	
	M16x1,5	**A0131IB**	**A0131IS**		**RDI01IS/A4**	
	M20x1,5	**A131IB**	**A131IS**		**RDI1IS/A4**	
	M25x1,5	**A231IB**	**A231IS**		**RDI2IS/A4**	
	M32x1,5	**A331IB**	**A331IS**		**RDI3IS/A4**	
	M40x1,5	**A431IB**	**A431IS**		**RDI4IS/A4**	
	M50x1,5	**A531IB**	**A531IS**		**RDI5IS/A4**	
	M63x1,5	**A631IB**	**A631IS**		**RDI6IS/A4**	
	M75x1,5	**A731IB**	**A731IS**			
	M90x1,5	**A831IB**	**A831IS**			
	M100x1,5	**A1031IB**	**A1031IS**			
	M115x1,5	**A1031B**	**A1031S**			

Black TPV protector	CG	Code
	NEVL01NB	**PGA1F**
	NEVL1SNB	**PGA1N**
	NEVL1NB	**PGA1**
	NEVL2NB	**PGA2N**
	NEVL3NB	**PGA4**
	NEVL4NB	**PGA5**
	NEVL5SNB	**PGA5**
	NEVL5NB	**PGA5N**
	NEVL6SNB	**PGA6**
	NEVL6NB	**PGA7**
	NEVL7SNB	**GTR** Heat shrinkable
	NEVL7NB	
	NEVL8NB	
	NEVL9NB	
	NEVL10NB	

* For different threads, contact the sales department.

ED.2023

vendite@elfit.com info@elfit.com
www.elfit.com

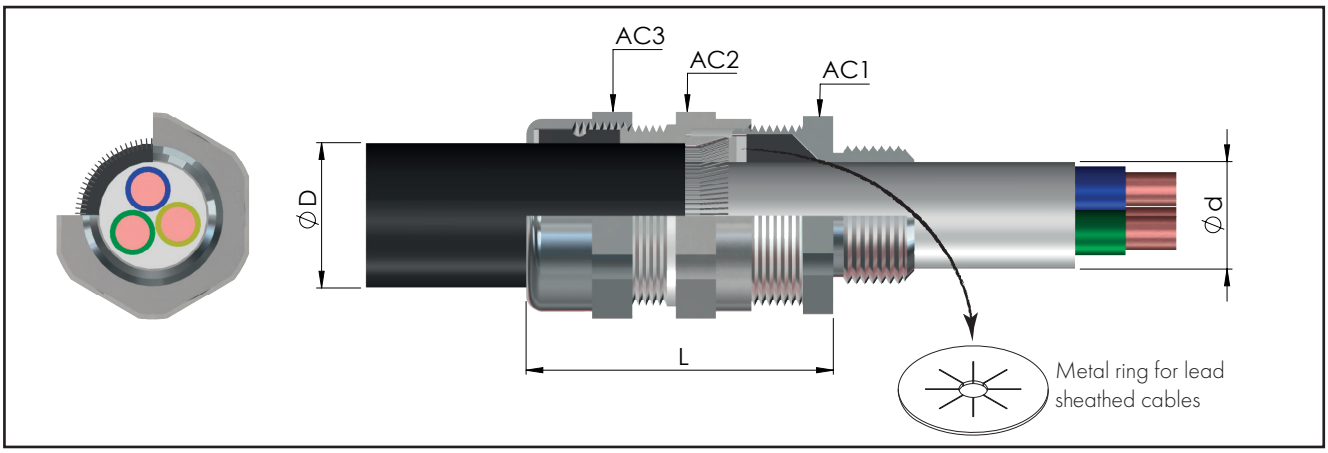

CABLE GLAND SELECTION TABLE

Code Nickel-plated brass	Thread	Code Nickel-plated brass	Thread	Dimensions in mm AC1	AC2	AC3	L	Range Ød min-max Internal cable sheath	ØD min-max Outer sheath of the cable	Armour thickness	Weight Kg
NEVL02NB	1/4" NPT	**NEVL12IB**	M12x1,5	18	18	18	59	3.0 - 6.0	6 - 10.0	0.2 - 1.3	0,100
NEVL01NB	3/8" NPT	**NEVL16IB**	M16x1,5	24	24	24	59	3.5 - 8.6	6 - 13.2	0.2 - 1.3	0,145
NEVL1SNB	1/2" NPT	**NEVL20SIB**	M20x1,5	24	26	26	59	6.3 - 11.6	9.5 - 16	0.2 - 1.3	0,157
NEVL1NB	1/2" NPT	**NEVL20IB**	M20x1,5	30	32	32	61	6.5 - 14	12.5 - 21	0.2 - 1.4	0,215
NEVL2NB	3/4" NPT	**NEVL25IB**	M25x1,5	36	38	38	61	11 - 20	20 - 27.5	0.2 - 1.6	0,261
NEVL3NB	1" NPT	**NEVL32IB**	M32x1,5	45	47	47	72	17 - 27	23.5 - 34	0.2 - 2.0	0,433
NEVL4NB	1 ¼" NPT	**NEVL40IB**	M40x1,5	50	52	52	73	22 - 32	26 - 40	0.2 - 2.2	0,514
NEVL5SNB	1 ½" NPT	**NEVL50SIB**	M50x1,5	55	57	57	80	29.5 - 38	35 - 46.5	0.2 - 2.5	0,610
NEVL5NB	2" NPT	**NEVL50IB**	M50x1,5	62/60*	62	62	81	35.5 - 44	38 - 53	0.2 - 2.5	0,562
NEVL6SNB	2" NPT	**NEVL63SIB**	M63x1,5	68	75	77	91	40 - 50	45.5 - 59.5	0.2 - 2.5	1,151
NEVL6NB	2 ½" NPT	**NEVL63IB**	M63x1,5	75/73*	80	82	93	47 - 56	54.5 - 66	0.2 - 2.5	1,100
NEVL7SNB	2 ½" NPT	**NEVL75SIB**	M75x1,5	80	85	90	97	53 - 62	57 - 72	0.2 - 2.8	1,308
NEVL7NB	3" NPT	**NEVL75IB**	M75x1,5	90/85*	95	100	99	59 - 68	66.5 - 78.5	0.2 - 2.8	1,538
NEVL8NB	3" NPT	**NEVL90IB**	M90x1,5	100	105	110	104	66 - 79	76.5 - 90	0.2 - 2.8	2,000
NEVL9NB	3 ½" NPT	**NEVL100IB**	M100x1,5	115	120	120	111	76 - 91	86 - 101	0.2 - 3.3	2,381
NEVL10NB	4" NPT	**NEVL115IB**	M115x1,5	120	125	130	112	86 - 98	100 - 110	0.2 - 3.5	2,783

** Dimensions with threaded: NPT / ISO*

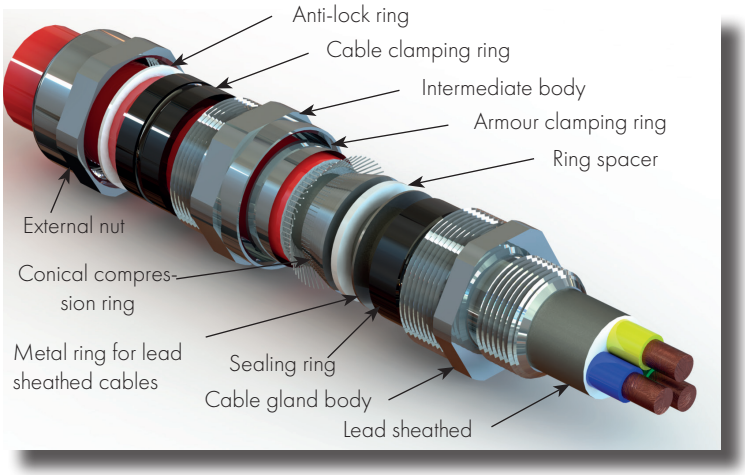

Sample order code

NEVL	6	N	B
MODEL	SIZE	THREAD	MATERIAL

TECHNICAL NOTES:

- *Silicone o-rings are supplied for cylindrical threads (ISO metric) for the pre-assembled IP seal on the cable gland*
- *The ISO7/1 thread version is available upon request (sample code NEVL1B)*
- *Also available in stainless steel AISI 316 (sample code NEVL1**S**)*
- *Other materials on request*
- *For "Ex i" intrinsic safety version, RAL 5015 blue nut (sample code NEVL1S**IA**)*
- *Internal ring for armoured cables with larger cross-section*