M-0

M-0 series control, monitoring and signalling devices are installed as external accessories on Cortem 'Ex d' enclosures used in any industrial environment where an explosive atmosphere may be present, classified as Zone 1, 2, 21, 22. M-0 control devices can be used to close or open electrical or mechanical devices fitted inside the 'Ex d' enclosures while the signalling devices feature lights to indicate their operating status. The control and signalling device components are made from stainless steel to deliver unbeatable efficiency under any environmental conditions. Levers are made from aluminium while the plastic parts on push-buttons are designed to provide lengthy service life even when used in a highly corrosive atmosphere. M-0 control and signalling devices have an IP66 protection degree.

CERTIFICATION DATA FOR CONTROL DEVICES

Classification:	Group II	Category 2GD	
Installation: EN 60079.14	zone 1 - zone 2 (Gas)	zone 21 - zone 22 (Dust)	
Marking:	CE 0722 Ex II 2GD Ex db IIC Gb; Ex tb IIIC Db; IP66		
	CE 0722 Ex I M2 Ex db I Mb		Only in stainless steel
Certification:	ATEX CESI 01 ATEX 025U		
	IEC Ex CES 14.0030U	All IEC Ex, UKEX, CCC and INMETRO certification data can be downloaded from www.cortemgroup.com	
	UKEX AVAILABLE		
	INMETRO DNV 16.0100U		
	CCC AVAILABLE		
Standards:	CENELEC EN 60079-0: 2018, EN 60079-1: 2014, EN 60079-31:2014 and EUROPEAN DIRECTIVE 2014/34/UE IEC 60079-0: 2017, IEC 60079-1: 2014-06, IEC 60079-31: 2013		
Degree of protection:	IP66		

The command, control and signalling operators series M-0... have the following temperature ranges:

Gruppo I applications: operating temperature -20°C +100°C

Gruppo II applications: operating temperature -60°C +100°C

MECHANICAL FEATURES OF CONTROL DEVICES

Outer body: Aluminium
Internal bush: Stainless steel
Internal pin: Stainless steel
Gaskets: Silicone
Push-button: Coloured nylon
Illuminated push-button: Clear coloured polycarbonate
Handle levers: Aluminium
Coating: Polyester coating RAL 7035 (Light grey), where this is an option
Device mounting: Screws into lid
Contact mounting: Snaps onto special flange, which assures quick connection of the whole contact block to the device

ELECTRICAL FEATURES (Contact block for push-buttons)

Rated voltage: 600V
Rated current: 10A
Impulse withstand voltage: 4kV

Insulation category: Group C as per VDE 0110

Degree of protection of terminals: IP2x as per CENELEC EN 60529

Contact operation:
- slow acting
- self-cleaning (wiping action)
- NC contact forced opening
- double movable bridge
- four points of contact
- double break

Contact resistance
≤ 25 mΩ as per IEC 255.7 category 3

Short-circuit protection
16A gG time-delay fuses as per IEC 269.1 and 269.3

Electrical performance
Rated thermal current Ith = 10 A
Operational limits as per IEC 947.5.1:

Category AC15								
Voltage Ue (V)	24	48	60	110	220	380	500	600
Current Ie (A)	10	10	10	6	3	2	1.5	1.2
Category DC13								
Voltage Ue (V)	24	48	60	110	220	300		
Current Ie (A)	2.5	1.5	1	0.22	0.27	0.2		

Operational limits as per IEC 947.5.1:

AC Heavy Duty	(A600)
DC Standard Duty	(Q300)

ELECTRICAL FEATURES (Contact block for M-0553.. handles)

Alternating current

Series			10	16	20	32	40/63
Rated voltage	U_e VDE/IEC	V	690	690	690	690	690
Rated current	I_{th} VDE/IEC	A	20	25	32	45	63
AC3 VDE/IEC, Direct starting of squirrel cage motor, stop during operation	220V-240V	kW	2.2	4.5	5.5	7.5	15
	380V-440V	kW	4.0	7.5	9.0	11.0	30
	660V-690V	kW	4.0	7.5	11.0	15.0	30
	110V	kW	0.4	1.5	1.5	2.5	2.5
	220V-240V	kW	0.75	2.5	4.5	4.0	6
	400V	kW	1.3	4.0	5.5	5.5	7.5

ILLUSTRATION	DIMENSIONS mm	DESCRIPTION	CODE
	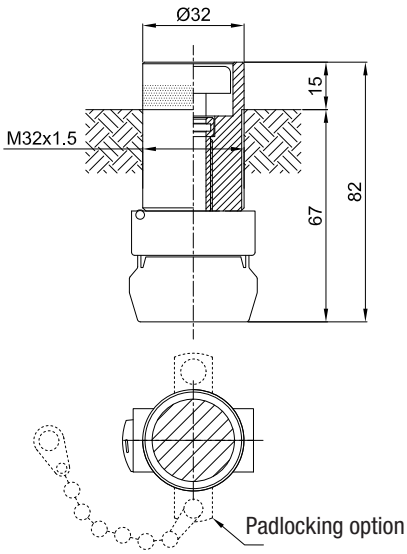	Normal push-button with standard 10A 600V 1NO+1NC contacts. Button comes in choice of six colours.	
		BLUE **(B)**	**M-0429../B..**
		WHITE **(BI)**	**M-0429../BI..**
		YELLOW **(G)**	**M-0429../G..**
		BLACK **(N)**	**M-0429../N..**
		RED **(R)**	**M-0429../R..**
		GREEN **(V)**	**M-0429../V..**
		Add **IN** for stainless steel body Suffix **L** for padlocking option	
	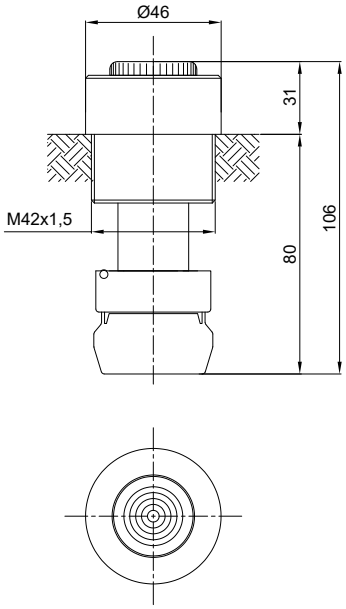	Illuminated push-button with standard 10A 600V 1NO+1NC contacts. (lamps on request) Illuminated button comes in choice of five colours.	
		BLUE **(B)**	**M-0428../B**
		WHITE **(I)**	**M-0428../I**
		YELLOW **(G)**	**M-0428../G**
		RED **(R)**	**M-0428../R**
		GREEN **(V)**	**M-0428../V**
		Add **IN** for stainless steel body	
	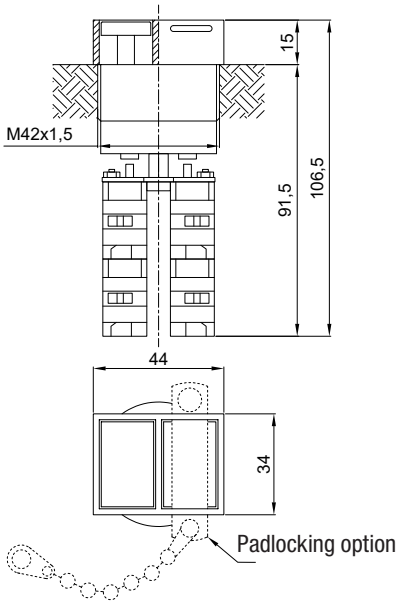	Double push-button with standard 10A 600V contacts. Comprises one red button 1NO+1NC and one black button 1NO+1NC. Add suffix **L** for padlocking option	**M-0427..**

ILLUSTRATION	DIMENSIONS mm	DESCRIPTION	CODE
	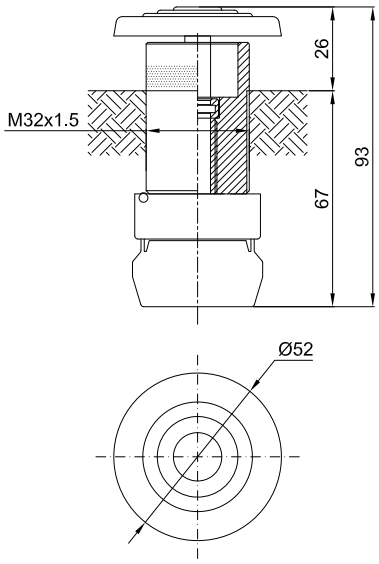	Emergency stop mushroom-head push-button with standard contacts 10A 600V 1NO+1NC. Comprises a red mushroom head push-button. Add suffix **IN** for stainless steel body	**M-0430..**
	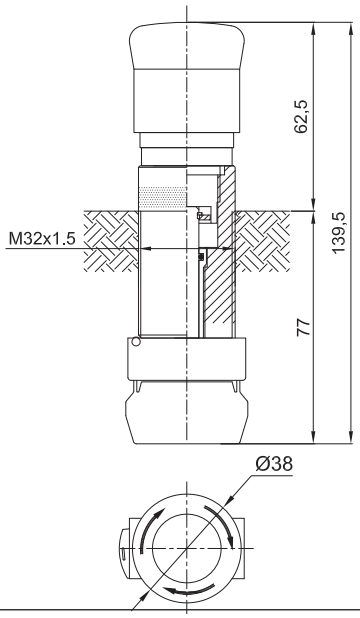	Twist-to-release emergency stop push-button with standard 10A 600V 1NO+1NC contacts. Comprises a red button with twist mechanism for push-button release (turn to release when button is pressed) Add suffix **IN** for stainless steel body	**M-0445..**
	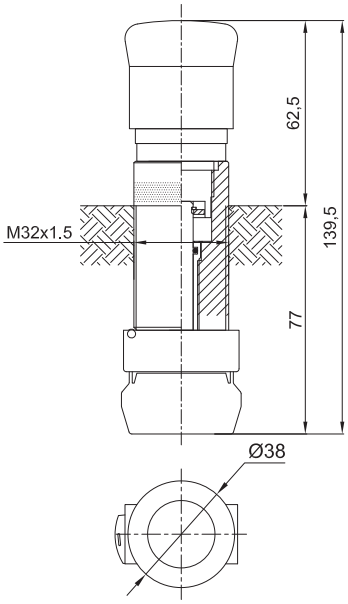	Pull-to-release emergency stop push-button with standard 10A 600V 1NO+1NC contacts. Comprises a red button with mechanism for push-button release (pull to release when button is pressed) Add suffix **IN** for stainless steel body	**M-0447..**

ILLUSTRATION	DIMENSIONS mm	DESCRIPTION	CODE
	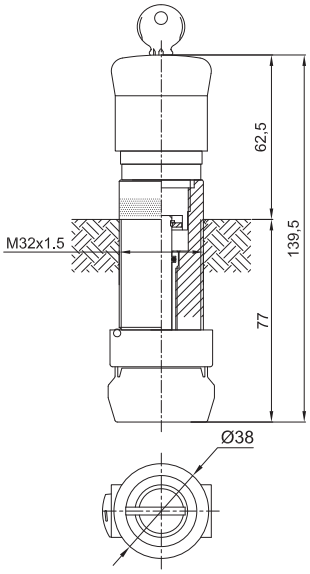	Key-to-release emergency stop push-button with standard 10A 600V contacts. Comprises a red button with key mechanism for push-button release (use key to release when button is pressed) Add suffix **IN** for stainless steel body	**M-0446..**
	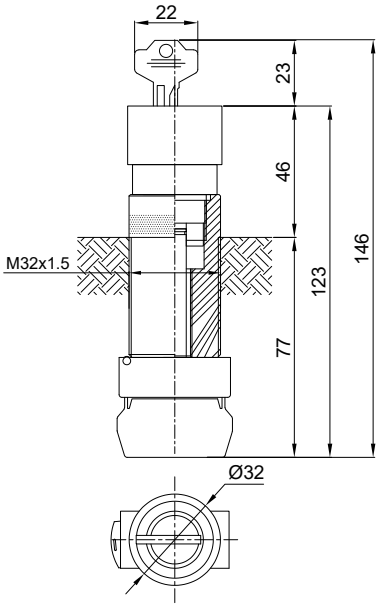	Key-to-release push-button with OFF setting and standard 10A 600V contacts (use key to release when button is pressed)	**M-0587**
	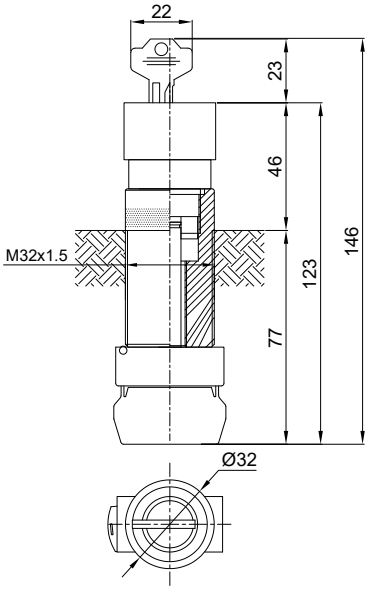	Key-operated push-button with ON/OFF settings and standard 10A 600V contacts (use key to press and release)	**M-0588**

ILLUSTRATION	DIMENSIONS mm	DESCRIPTION	CODE
	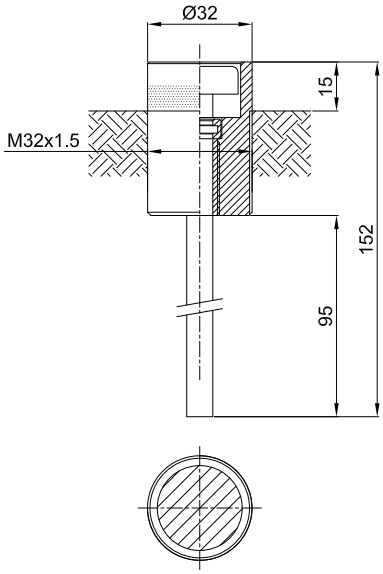	Reset push-button, comprises one red or black button, used for operating thermal relays. Black button Red button	 M-0117 M-0117/R
	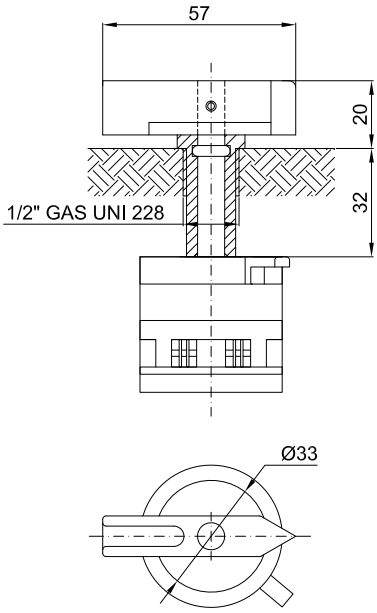	Quick-connect handle for cam or rotary switch. Fixed pin length. Add suffix **IN** for stainless steel body **Note:** **contact block is supplied on request.** **Please contact our sales department if you need advice**	M-0553..
	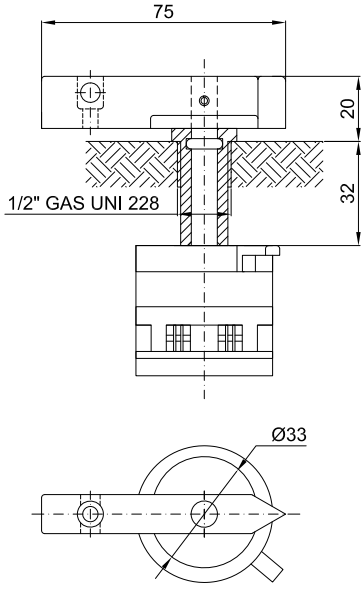	Quick-connect padlockable handle for cam or rotary switch. Fixed pin length. Add **IN** for stainless steel handle **Note:** **contact block is supplied on request.** **Please contact our sales department if you need advice**	M-0553..L

ILLUSTRATION	DIMENSIONS mm	DESCRIPTION	CODE
	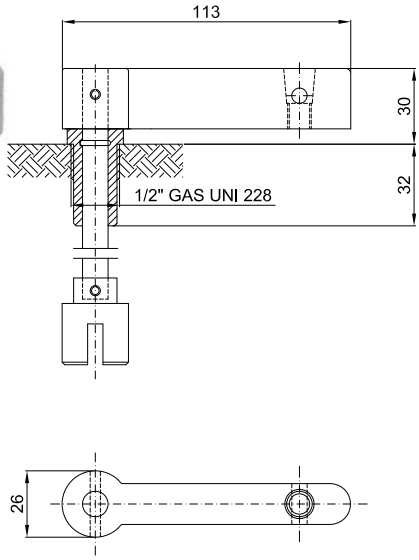	Padlockable handle for cam switch	
		Variable pin length	M-0438../V
		Fixed pin length	M-0438../F
		Add **IN** for stainless steel handle	
	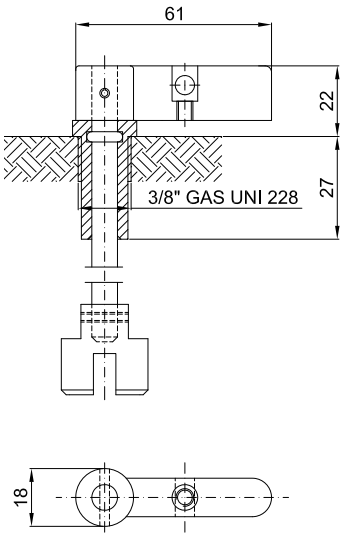	Padlockable handle for special switches (3RV motor protectors)	
		Variable pin length	M-0437../V
		Fixed pin length	M-0437../F
		Add **IN** for stainless steel handle	
	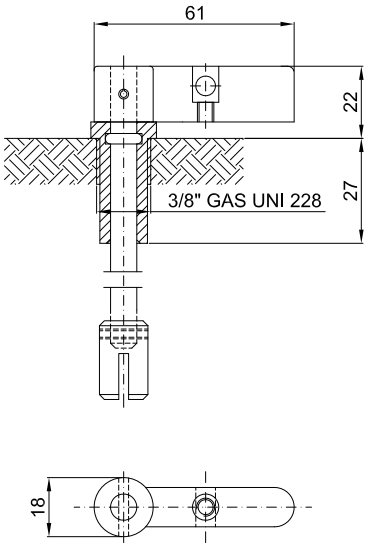	Padlockable handle for switches with Ø6 shaft	
		Variable pin length	M-0433../V
		Fixed pin length	M-0433../F
		Add **IN** for stainless steel handle	

ILLUSTRATION	DIMENSIONS mm	DESCRIPTION	CODE
	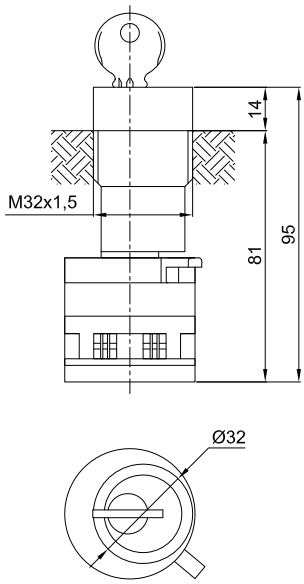	Direct key-operated quick-connect knob for cam switch. Stainless steel bush. **Note:** **contact block is supplied on request.** **Please contact our sales department if you need advice**	**M-093/CF**
	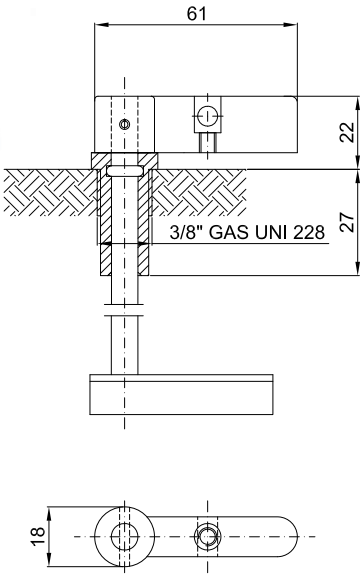	Padlockable handle for enclosed circuit breakers	
		Variable pin length (size to order)	**M-0435../V**
		Fixed pin length	**M-0435../F**
		Add **IN** for stainless steel handle	
	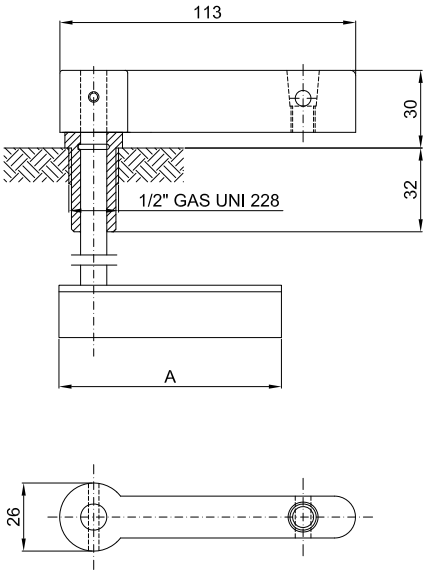	Padlockable handle for heavy-duty series enclosed circuit breakers	
		Variable pin length (A=85)	**M-0439../V**
		Fixed pin length (A=85)	**M-0439../F**
		Variable pin length (A=100)*	**M-0439../V1**
		Fixed pin length (A=100)*	**M-0439../F1**
		Add **IN** for stainless steel handle	
		* Handle for 400/630A enclosed circuit breakers	

ILLUSTRATION	DIMENSIONS mm	DESCRIPTION	CODE
	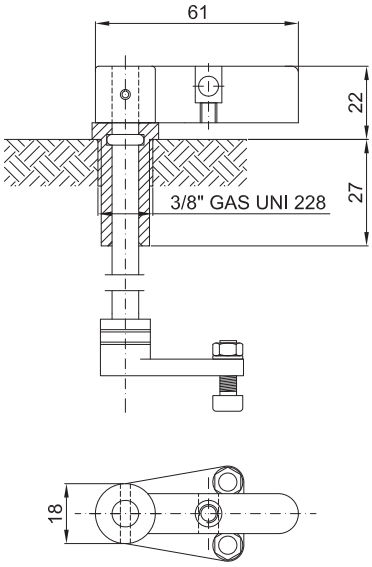	Padlockable handle for modular circuit breakers. Fixed pin length Variable pin length Add **IN** for stainless steel handle	 **M-0436../F1** **M-0436../V1**
	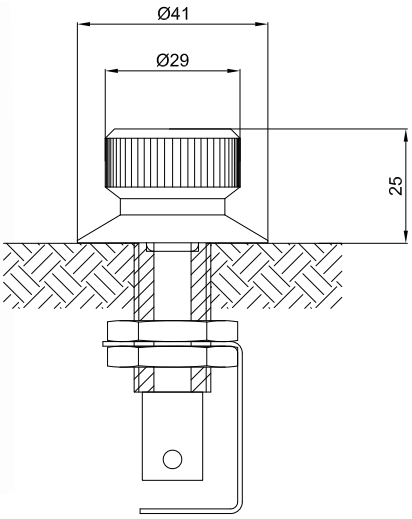	Knob for potentiometers with Ø6 shaft	**M-0557**
	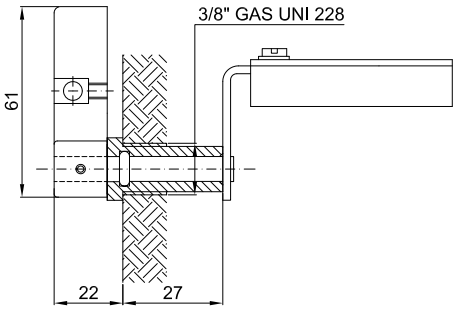	Handle for enclosed circuit breakers. Wall mounting.	**M-0440**

ILLUSTRATION	DIMENSIONS mm	DESCRIPTION	CODE
	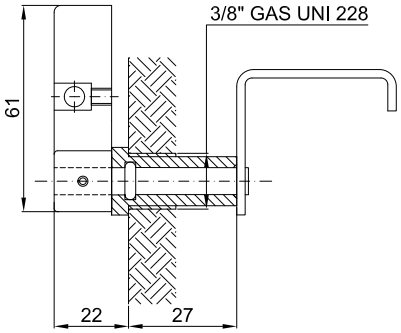	Handle for modular circuit breakers. Wall mounting.	**M-0441**

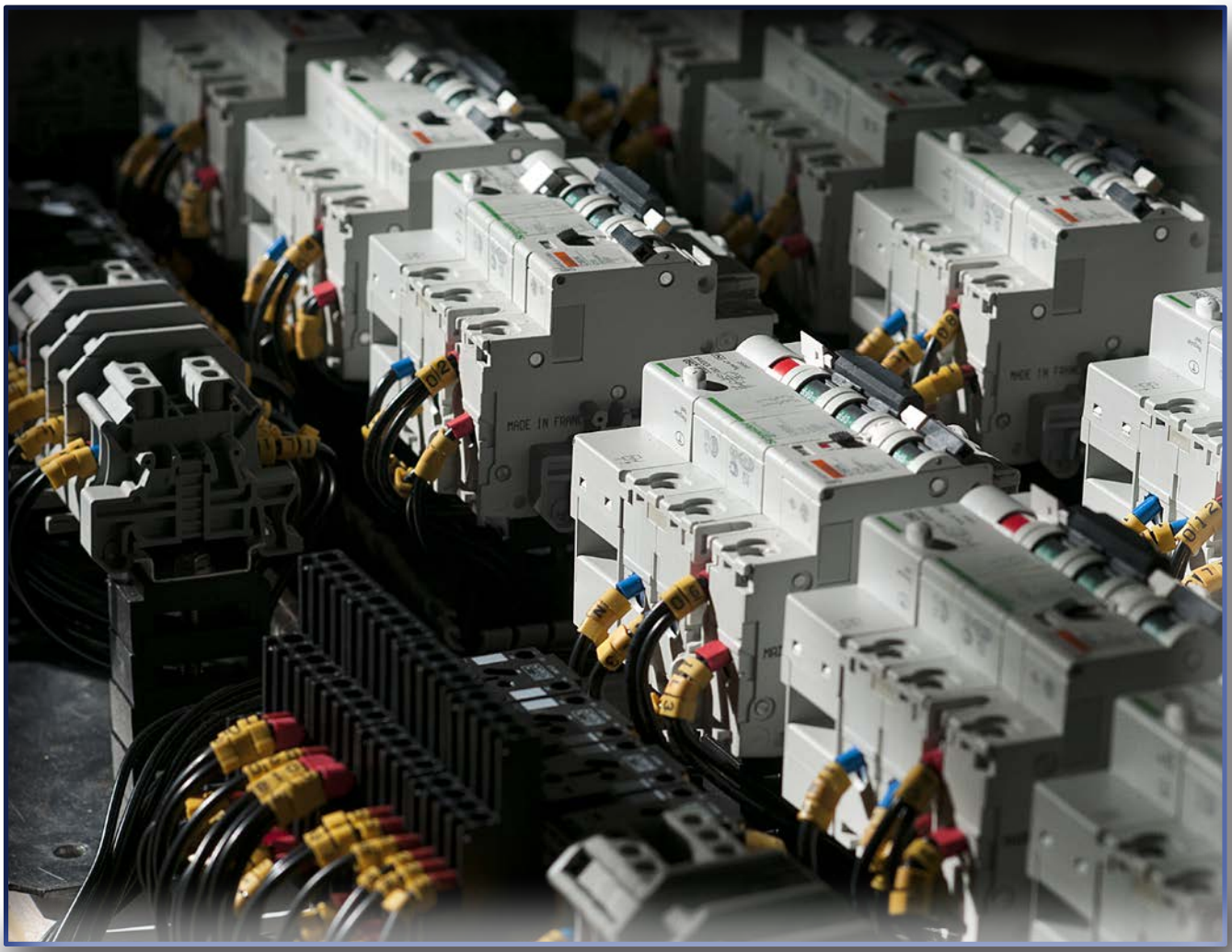

CERTIFICATION DATA FOR SIGNALLING DEVICES

Classification:	Group II	Category 2GD		
Installation: EN 60079.14	zone 1 - zone 2 (Gas)	zone 21 - zone 22 (Dust)		
Marking:	CE 0722 Ex II 2GD Ex db IIC Gb; Ex tb IIIC Db; IP66		(M-0457...)	
	CE 0722 Ex I M2 Ex db I Mb		Only in stainless steel	
	CE 0722 Ex II 2G Ex db eb IIC Gb; Ex tb IIIC Db IP66		(M-0487...)	
Certification:	ATEX CESI 01 ATEX 025U		(M-0457...)	
	ATEX CESI 00 ATEX 060U		(M-0487...)	
	IEC Ex CES 14.0030U	(M-0457...)	All IEC Ex certification data can be downloaded from www.cortemgroup.com	
	IEC Ex CES 11.0030U	(M-0487...)		
Standards:	CENELEC EN 60079-0: 2018, EN 60079-1: 2014, EN 60079- 2015, EN 60079-31:2014 and EUROPEAN DIRECTIVE 2014/34/UE IEC 60079-0: 2017, IEC 60079-1: 2014-06, IEC 60079-31: 2013, IEC 60079-7: 2015			
Degree of protection:	IP66			

MECHANICAL FEATURES OF SIGNALLING DEVICES

Outer body: Impact-resistant UV-stable polycarbonate
Bush (for M-0457AL): Aluminium
Bush (for M-0457IN): Stainless steel
Bush (for M-0487): Aluminium
Gaskets: Acid/hydrocarbon-resistant silicone
Device mounting: Screws into lid

ELECTRICAL FEATURES

Rated voltage: 12/240 Vac/dc
Power: max. 3W
Frequency: 50 / 60 Hz

The command, control and signalling operators series M-0... have the following temperature ranges:
Gruppo I applications: operating temperature -20°C +100°C
Gruppo II applications: operating temperature -40°C +100°C
operating temperature -60°C +100°C
only for signalling operators serie M-0457AL, M-0457AL/3, M-0457IN, M-0457IN/3

ILLUSTRATION	DIMENSIONS mm	DESCRIPTION	CODE

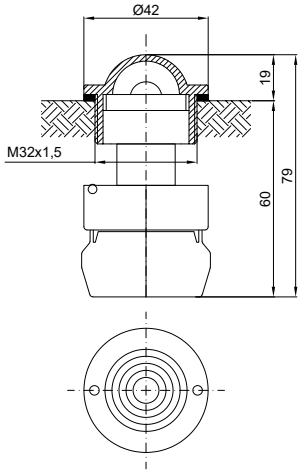

Indicator light with 3W lamps (on request*), 12/240 Vac/dc.
Lens comes in choice of five colours.

Blue		**M-0457/B**
Yellow		**M-0457/G**
Red		**M-0457/R**
Green		**M-0457/V**
Clear		**M-0457/I**
* lamp	12V:	**LAMPBA9S12V**
	24V:	**LAMPBA9S24V**
	110V:	**LAMPBA9S110V**
	240V:	**LAMPBA9S240V**

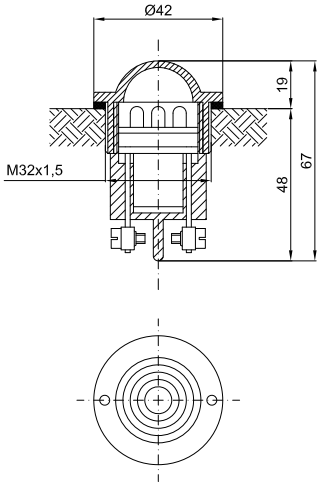

Indicator light with three high-brightness LEDs, for a consumption of 20mA and estimated life of around 50,000 hours.
Lens comes in choice of five colours.

Blue	**M-0457/3B...**
Yellow	**M-0457/3G...**
Red	**M-0457/3R...**
Green	**M-0457/3V...**
Clear	**M-0457/3I...**

Add suffix: **24** for 24 Vac/dc
110 for 110 Vac/dc
230 for 230 Vac

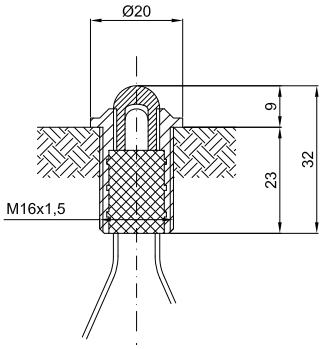

Indicator light with one high-brightness LED, for a consumption of 20 mA and estimated life of around 50,000 hours.

Color	If (mA)	Vf Tip. (V)	Vf max. (V)	
Red	20	2.1	2.6	**M-0487**
Yellow	20	2.1	2.4	**M-0487/G**
Clear	20	3.2	4.0	**M-0487/I**
Green	20	3.2	4.0	**M-0487/V**
Bicolor	20	2.0	2.5	**M-0487/1**

ILLUSTRATION	DIMENSIONS mm	DESCRIPTION	CODE

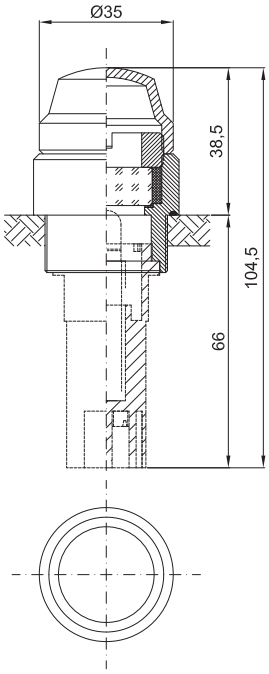

Indicator light for operating temperature -60°C with 3W lamps (on request*), 12/240 Vac/dc. Lens comes in choice of five colours.

Blue		**M-0457AL/B**
Yellow		**M-0457AL/G**
Red		**M-0457AL/R**
Green		**M-0457AL/V**
Clear		**M-0457AL/I**
Blue (stainless steel)		**M-0457IN/B**
Yellow (stainless steel)		**M-0457IN/G**
Red (stainless steel)		**M-0457IN/R**
Green (stainless steel)		**M-0457IN/V**
Clear (stainless steel)		**M-0457IN/I**
* lamp	12V:	**LAMPBA9S12V**
	24V:	**LAMPBA9S24V**
	110V:	**LAMPBA9S110V**
	240V:	**LAMPBA9S240V**

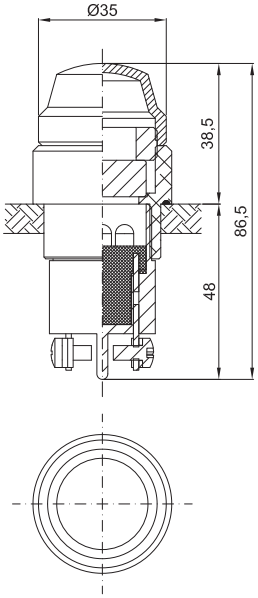

Indicator light for operating temperature -60°C with three high-brightness LEDs, for a consumption of 20mA and estimated life of around 50,000 hours. Lens comes in choice of five colours.

Blue	**M-0457AL/3B...**
Yellow	**M-0457AL/3G...**
Red	**M-0457AL/3R...**
Green	**M-0457AL/3V...**
Clear	**M-0457AL/3I...**
Blue (stainless steel)	**M-0457IN/3B...**
Yellow (stainless steel)	**M-0457IN/3G...**
Red (stainless steel)	**M-0457IN/3R...**
Green (stainless steel)	**M-0457IN/3V...**
Clear (stainless steel)	**M-0457IN/3I...**

Add suffix: **24** for 24 Vac/dc
110 for 110 Vac/dc
230 for 230 Vac

PROTECTION AND PADLOCKING SYSTEMS FOR STANDARD CONTROL AND SIGNALLING DEVICES

Padlocking system designed for push-buttons M-0429../..L

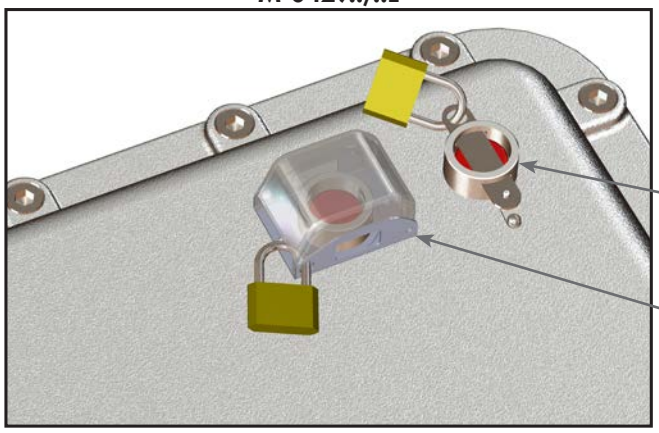

Assembly comprising stainless steel padlocking bar and chain for fastening to lid **M-0615**

Padlocking protection (code **M-0631**)

Padlock supplied on request

Padlocking system designed for double push-buttons M-0427

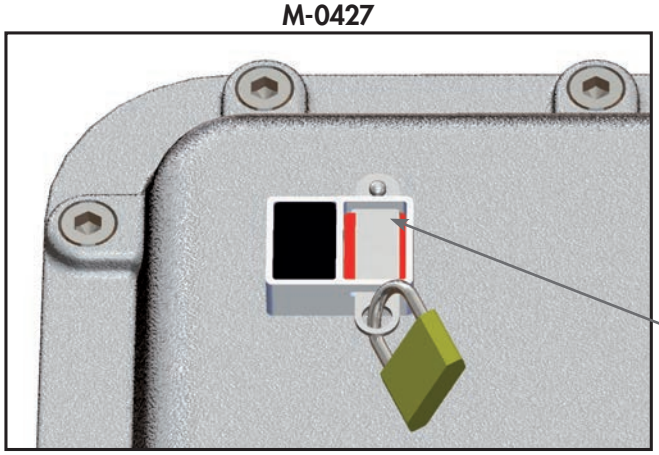

Assembly comprising stainless steel padlocking bar and chain for fastening to lid. Code **M-0615**

System protecting against accidental operation for mushroom-head push-buttons M-0445.. and M-0447..

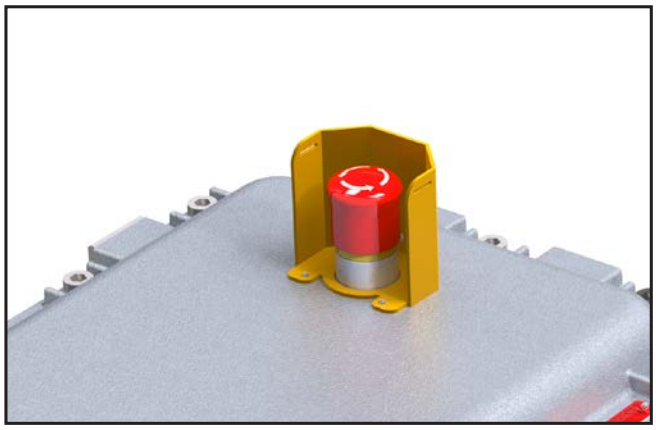

Protection in stainless steel coating in yellow.
Code **M-987**

System designed for push-buttons M-0445../..L

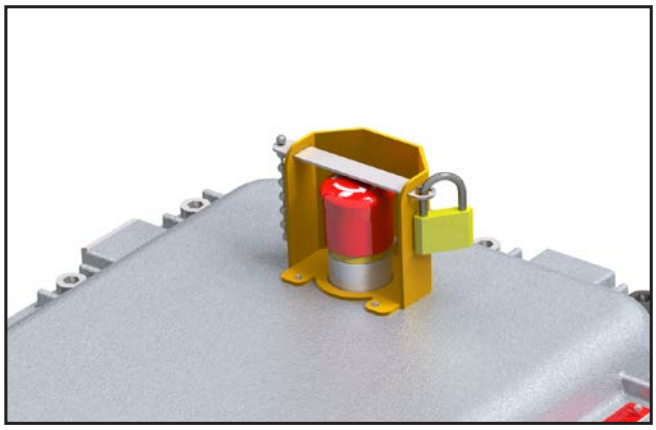

Assembly comprising stainless steel padlocking bar and chain for fastening. **M-0615/1**

PROTECTION AND PADLOCKING SYSTEMS FOR STANDARD CONTROL AND SIGNALLING DEVICES

Padlocking system designed for handles

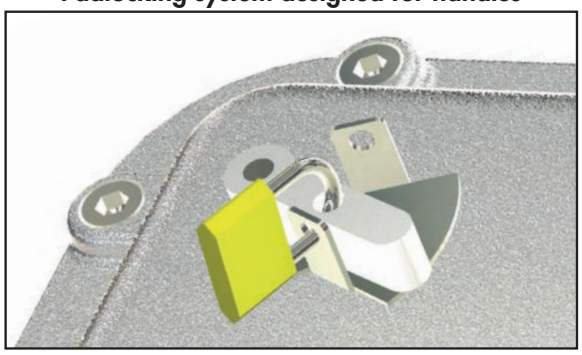

This padlocking device is suitable for 3/8" GAS UNI 228 handles from the following series:

- M-0437
- M-0433
- M-0437
- M-0435
- M-0436
- M-0440
- M-0441

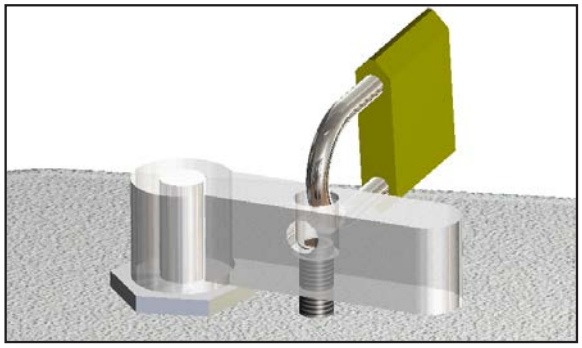

For 1/2" GAS UNI 228 heavy-duty series handles, i.e.:

- M-0438
- M-0439

we recommend using a locking grub screw screwed into the handle and lid

Type of handle padlocking devices

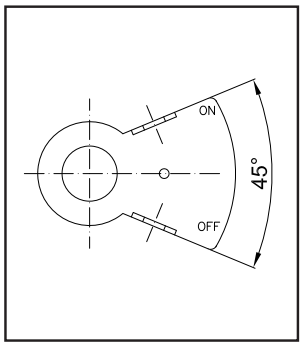

Code **M-698**

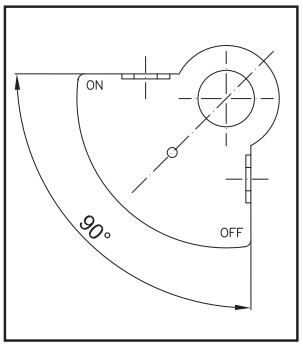

Code **M-698/1**

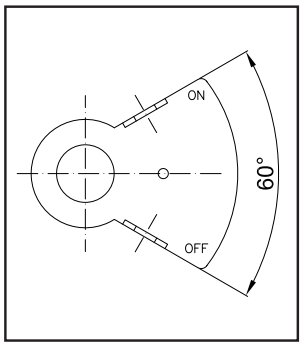

Code **M-698/2**

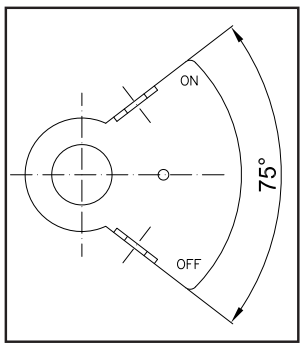

Code **M-698/3**

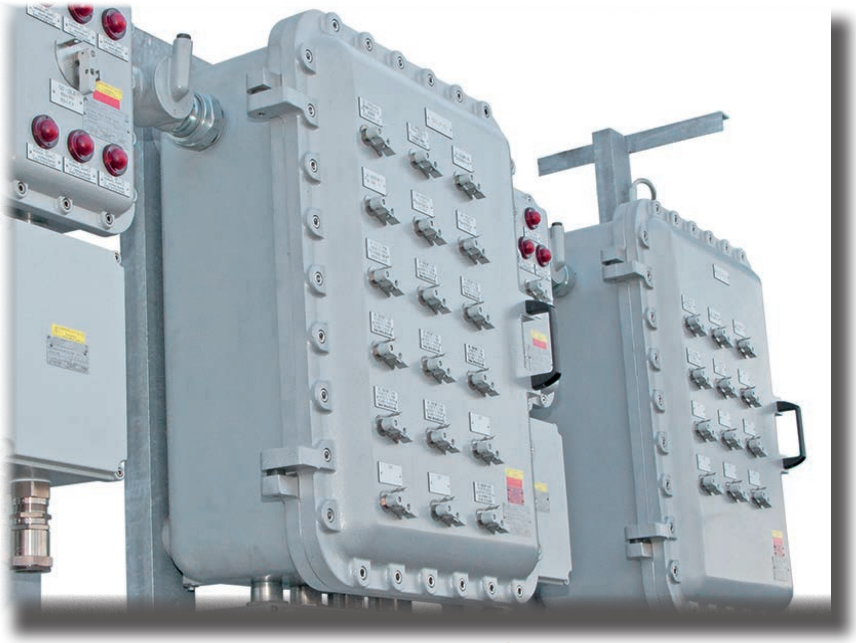

All identification, test or warning labels located on the enclosure lids are made from aluminium, stainless steel or Traffolyte depending on your specific requirements or as dictated by our own standards.

They can be sized by our technical department based on standard models.