Cable gland series NEVL for lead sheathed armoured cables

ELFiT ELectrical FITtings

NEVL series cable glands are suitable for use in areas with the risk of explosion, allowing the direct insertion of armoured cables in explosion proof enclosures and the installation of lead sheathed cables. They are supplied with a sealing ring which is stretched over the cable at the inlet ensuring the anti-loosening, 'Ex d' execution, and a second compression ring which is stretched over the cable armour at the outlet to guarantee an IP 66/68 protection rating, and a metal ring which affixes to the outer surface of the lead sheath as it is wound, fastening it in place. Their structure makes them suitable for environments which are particularly difficult, such as marine environments, or where there are subjected to the mechanical stresses and impacts which often occur in heavy industry, where safety is the utmost priority.

Safety, use and maintenance instructions

Classification: 2014/34/EU	Group II	Category 2GD/3G
Installation: EN 60079.14	zone 1 - zone 2 (Gas)	zone 21 - zone 22 (Dust)
Marking:	CE 0722 Ex II 2 GD - Ex db IIC Gb - Ex eb IIC Gb II 2 D - Ex tb IIIC Db II 3G Ex nR IIC Gc - IP66/68	
Certification:	ATEX (category 2): IMQ 17 ATEX 016X ATEX (category 3): IMQ 17 ATEX 017X IEC Ex IECEx IMQ 17.0010X	For IEC Ex and others certifications data can be downloaded at www.elfit.com
Standards:	CENELEC EN 60079-0: 2018, EN 60079-1: 2014, EN 60079-7: 2015, EN 60079-15: 2019, EN 60079-31: 2014 and EUROPEAN DIRECTIVE 2014/34/EU IEC60079-0: 2017, IEC60079-1: 2014, IEC60079-7: 2017, IEC60079-15: 2017, IEC60079-31: 2013 RoHS Directive 2002/95/EC	
Operating temperature:	-60 °C +130 °C	
Protection rating:	IP66/68 *(30 meters - 12 hours)*	
Design	BS 6121: Part 1:1989, IEC 62444, EN 62444	

Certificates are available on www.elfit.com

ACCESSORIES UPON REQUEST

Locknuts	Nickel-plated brass	Galvanized steel	Stainless steel
M12x1,5	**DL02IB**	**DL02IG**	**DL02IS**
M16x1,5	**DL01IB**	**DL01IG**	**DL01IS**
M20x1,5	**DL1IB**	**DL1IG**	**DL1IS**
M25x1,5	**DL2IB**	**DL2IG**	**DL2IS**
M32x1,5	**DL3IB**	**DL3IG**	**DL3IS**
M40x1,5	**DL4IB**	**DL4IG**	**DL4IS**
M50x1,5	**DL5IB**	**DL5IG**	**DL5IS**
M63x1,5	**DL6IB**	**DL6IG**	**DL6IS**
M75x1,5	**DL7IB**	**DL7IG**	**DL7IS**
M90x1,5	**DL8IB**	**DL8IG**	**DL8IS**
M100x1,5	**DL10IB**	**DL10IG**	**DL10IS**
M115x1,5	**DL115IB**	**DL115IG**	**DL115IS**

Sealing ring for flat/healing cables

Code and dimensions are in the page p. B.18

Nickel-plated brass earthing rings	Nickel-plated brass	Stainless steel
M12x1,5	**A0231IB**	**A0231IS**
M16x1,5	**A0131IB**	**A0131IS**
M20x1,5	**A131IB**	**A131IS**
M25x1,5	**A231IB**	**A231IS**
M32x1,5	**A331IB**	**A331IS**
M40x1,5	**A431IB**	**A431IS**
M50x1,5	**A531IB**	**A531IS**
M63x1,5	**A631IB**	**A631IS**
M75x1,5	**A731IB**	**A731IS**
M90x1,5	**A831IB**	**A831IS**
M100x1,5	**A1031IB**	**A1031IS**
M115x1,5	**A1031B**	**A1031S**

Serrated steinless steel lock washers	Code
	RDI02IS/A4
	RDI01IS/A4
	RDI1IS/A4
	RDI2IS/A4
	RDI3IS/A4
	RDI4IS/A4
	RDI5IS/A4
	RDI6IS/A4

Adapters and reducers of the **RE...** series

Black TPV protector	CG	Code
	NEVL01NB	**PGA1F**
	NEVL1SNB	**PGA1N**
	NEVL1NB	**PGA1**
	NEVL2NB	**PGA2N**
	NEVL3NB	**PGA4**
	NEVL4NB	**PGA5**
	NEVL5SNB	**PGA5**
	NEVL5NB	**PGA5N**
	NEVL6SNB	**PGA6**
	NEVL6NB	**PGA7**
	NEVL7SNB	**GTR** Heat shrinkable
	NEVL7NB	
	NEVL8NB	
	NEVL9NB	
	NEVL10NB	

* For different threads, contact the sales department.

CORTEM GROUP®

ED.2024

vendite@elfit.com info@elfit.com
www.elfit.com

Cable gland series NEVL for lead sheathed armoured cables

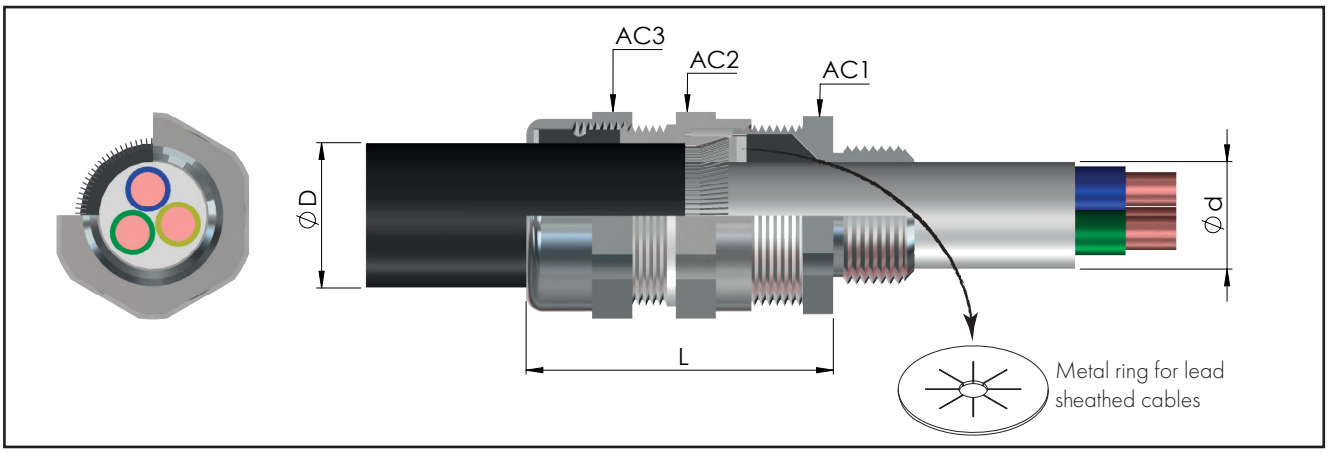

CABLE GLAND SELECTION TABLE

Code Nickel-plated brass	Thread	Code Nickel-plated brass	Thread	Dimensions in mm AC1	AC2	AC3	L	Range Ød min-max Internal cable sheath	ØD min-max Outer sheath of the cable	Armour thickness	Weight Kg
NEVL02NB	1/4" NPT	NEVL12IB	M12x1,5	18	18	18	59	3.0 - 6.0	6 - 10.0	0.2 - 1.3	0,100
NEVL01NB	3/8" NPT	NEVL16IB	M16x1,5	24	24	24	59	3.5 - 8.6	6 - 13.2	0.2 - 1.3	0,145
NEVL1SNB	1/2" NPT	NEVL20SIB	M20x1,5	24	26	26	59	6.3 - 11.6	9.5 - 16	0.2 - 1.3	0,157
NEVL1NB	1/2" NPT	NEVL20IB	M20x1,5	30	32	32	61	6.5 - 14	12.5 - 21	0.2 - 1.4	0,215
NEVL2NB	3/4" NPT	NEVL25IB	M25x1,5	36	38	38	61	11 - 20	20 - 27.5	0.2 - 1.6	0,261
NEVL3NB	1" NPT	NEVL32IB	M32x1,5	45	47	47	72	17 - 27	23.5 - 34	0.2 - 2.0	0,433
NEVL4NB	1 ¼" NPT	NEVL40IB	M40x1,5	50	52	52	73	22 - 32	26 - 40	0.2 - 2.2	0,514
NEVL5SNB	1 ½" NPT	NEVL50SIB	M50x1,5	55	57	57	80	29.5 - 38	35 - 46.5	0.2 - 2.5	0,610
NEVL5NB	2" NPT	NEVL50IB	M50x1,5	62/60*	62	62	81	35.5 - 44	38 - 53	0.2 - 2.5	0,562
NEVL6SNB	2" NPT	NEVL63SIB	M63x1,5	68	75	77	91	40 - 50	45.5 - 59.5	0.2 - 2.5	1,151
NEVL6NB	2 ½" NPT	NEVL63IB	M63x1,5	75/73*	80	82	93	47 - 56	54.5 - 66	0.2 - 2.5	1,100
NEVL7SNB	2 ½" NPT	NEVL75SIB	M75x1,5	80	85	90	97	53 - 62	57 - 72	0.2 - 2.8	1,308
NEVL7NB	3" NPT	NEVL75IB	M75x1,5	90/85*	95	100	99	59 - 68	66.5 - 78.5	0.2 - 2.8	1,538
NEVL8NB	3" NPT	NEVL90IB	M90x1,5	100	105	110	104	66 - 79	76.5 - 90	0.2 - 2.8	2,000
NEVL9NB	3 ½" NPT	NEVL100IB	M100x1,5	115	120	120	111	76 - 91	86 - 101	0.2 - 3.3	2,381
NEVL10NB	4" NPT	NEVL115IB	M115x1,5	120	125	130	112	86 - 98	100 - 110	0.2 - 3.5	2,783

** Dimensions with threaded: NPT / ISO*

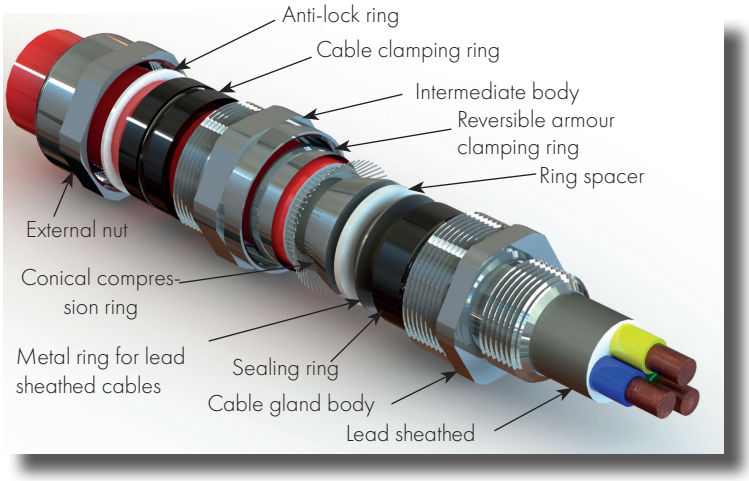

Sample order code

NEVL	6	N	B
MODEL	SIZE	THREAD	MATERIAL

TECHNICAL NOTES:

- *Silicone o-rings are supplied for cylindrical threads (ISO metric) for the pre-assembled IP seal on the cable gland*
- *The ISO7/1 thread version is available upon request (sample code NEVL1B)*
- *Also available in stainless steel AISI 316 (sample code NEVL1**S**)*
- *Other materials on request*
- *For "Ex i" intrinsic safety version, RAL 5015 blue nut (sample code NEVL1S**IA**)*
- *Internal ring for armoured cables with larger cross-section*