SA, SAG

- Zone 1, 2, 21, 22
- Aluminium enclosures
- Choice of 18 sizes
- IP66
- IK10

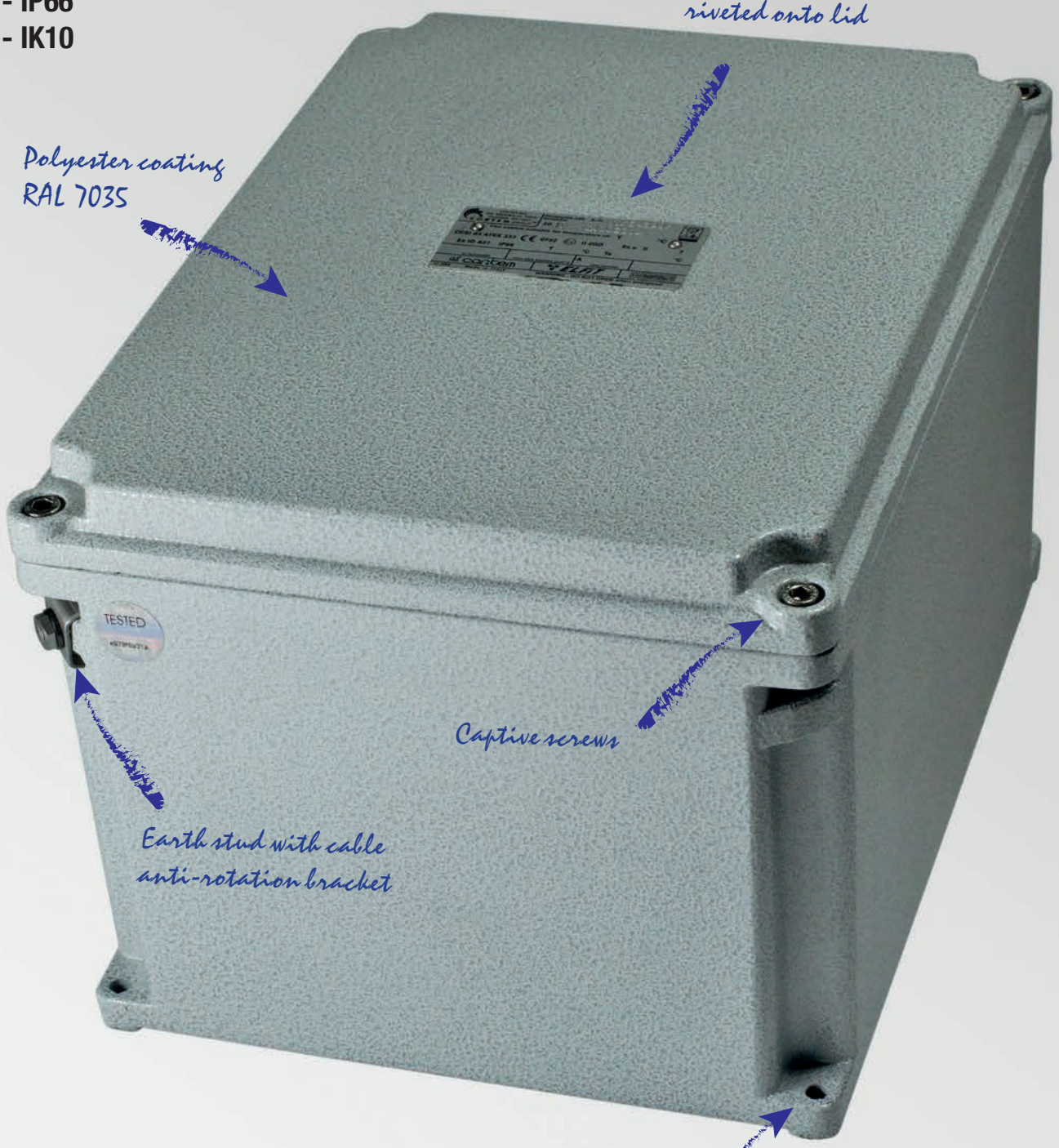

CORTEM® GROUP

SA series junction boxes: criteria for choosing the right product

When it comes to deciding on an increased safety enclosure, there is a whole series of essential data to be taken into account if you are to make the right choice: the mechanical strength of the materials, corrosion resistance, the IP protection rating and IK impact protection rating in the case of enclosures for watertight/ industrial use.

Mechanical strength

Properties	Unit	Stainless steel	Aluminium	Polyester
Density	g/cm^3	8.0	2.65	1.7
Tensile strength	MPa	500-700	80-110	130
Elongation	%	60-40	4-10	2
Modulus of elasticity	GPa	193	79	11
Yield strength	MPa	≥ 200	80-165	-
Coeff. of thermal expansion (20-100°C)	$10^{-6}K^{-1}$	16	21	-
Resistivity	Ωm	$7.5x10^{-7}$	$4.8x10^{-8}$	-
Electrical conductivity	$\Omega^{-1}m^{-1}$	$1.33x10^{6}$	$2.08x10^{7}$	-

The graph below gives an overview of what use the various materials are suitable for based on the mechanical stress and harshness of the environmental conditions likely to be encountered.

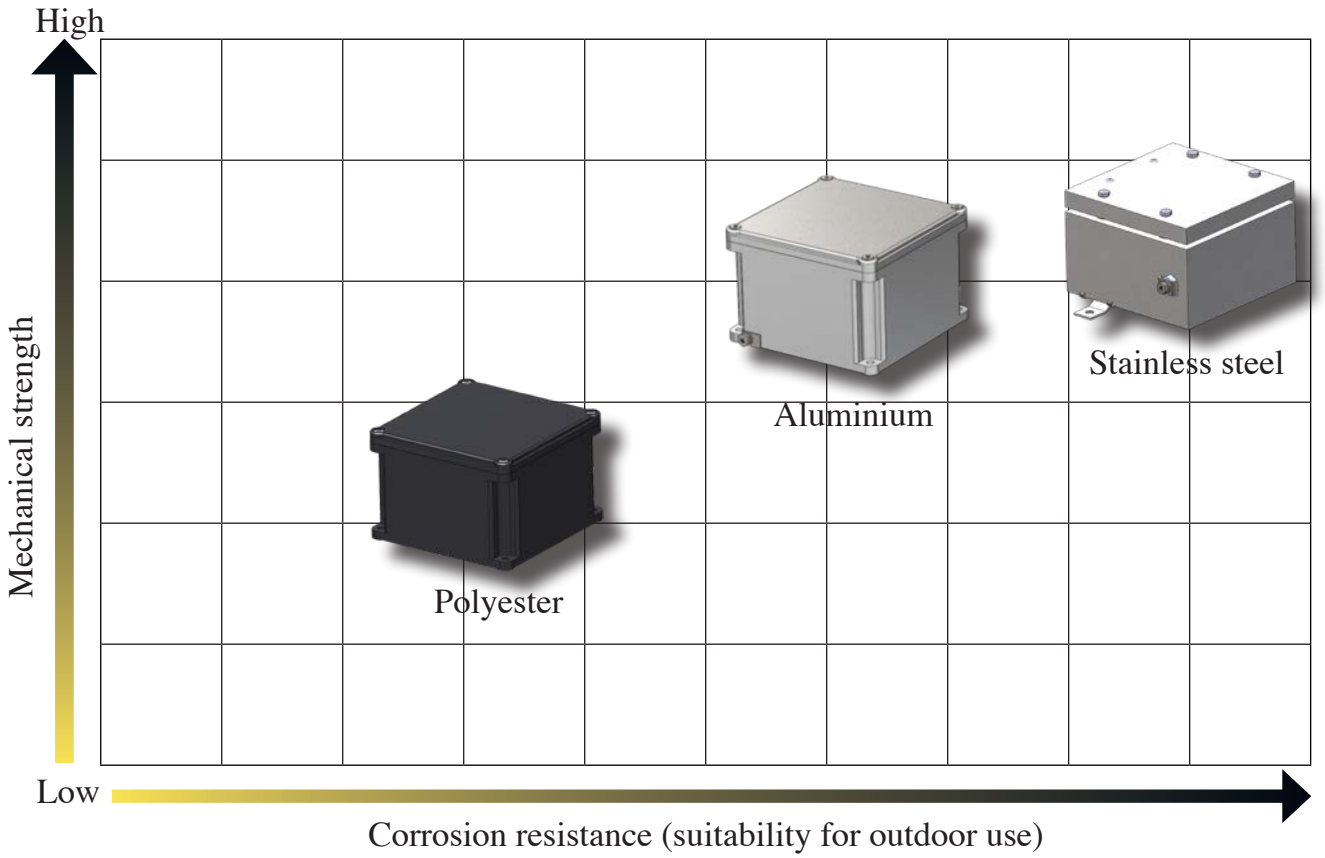

IP PROTECTION RATINGS (IEC 529, EN 60529-4, CEI 70-1 ed. 11/92)

The table gives protection ratings in accordance with standard CEI 70-1 ed. 11/92. Ratings are identified by the acronym IP followed by 2 digits, to which 2 letters may be added, indicating the degree to which persons are protected against access or other properties There is some variation in the application of ratings 7 and 8 relating to the ingress of liquids, with these ratings not always meaning that the item is suitable for lower levels (whereas IP rating x4 also covers the lower levels).

IMPACT PROTECTION RATINGS

This classification shows the acceptable level of strength, when evaluating a product's safety, and is mainly employed in relation to testing on electromechanical products.

1ST DIGIT PROTECTION AGAINST SOLID OBJECTS	2ND DIGIT PROTECTION AGAINST MOISTURE	PROTECTION AGAINST EXTERNAL MECHANICAL IMPACT *
0 Not protected	**0** Not protected	**IK00** Not protected
1 Protected against solid objects greater than 50mm in Ø (Ø 50)	**1** Protected against vertically falling drops of water	**IK01** 0.25 kg 5.6 cm Protected against impact energy of 0.15J
2 Protected against solid objects greater than 12mm in Ø (Ø 12)	**2** Protected against rain when tilted up to 15°	**IK03** 0.25 kg 14 cm Protected against impact energy of 0.35J
3 Protected against solid objects greater than 2.5mm in Ø (Ø 2.5)	**3** Protected against rain when tilted up to 60°	**IK05** 0.25 kg 28 cm Protected against impact energy of 0.7J
4 Protected against solid objects greater than 1mm in Ø (Ø 1)	**4** Protected against splashing water	**IK06** 0.25 kg 40 cm Protected against impact energy of 1J
5 Protected against dust	**5** Protected against jets of water from all directions	**IK07** 0.5 kg 40 cm Protected against impact energy of 2J
6 Totally protected against the ingress of dust	**6** Protected against heavy seas	**IK08** 1.7 kg 30 cm Protected against impact energy of 5J
	7 Protected against the effects of immersion	**IK09** 5 kg 20 cm Protected against impact energy of 10J
	8 Protected against the effects of continuous immersion	**IK10** 5 kg 40 cm Protected against impact energy of 20J

ADDITIONAL LETTER**

- **A** Protected against access with the back of the hand
- **B** Protected against access with a finger
- **C** Protected against access with a tool
- **D** Protected against access with a wire

OPTIONAL LETTER

- **H** High-voltage device
- **M** Tested against the harmful effects of water ingress with the equipment running
- **S** Tested against the harmful effects of water ingress with the equipment not running
- **W** Suitable for use in specified atmospheric conditions

* As per IEC EN 50102: 1996-05; IEC EN 60078-2-7-5: 1998-09.

** Optional letter describing protection against access by persons. Only used if protection against access to hazardous parts is greater than that indicated by the first digit, or if only protection against access to hazardous parts is given and an X is used in place of the first digit.

SA, SAG... series 'Ex eb' aluminium junction boxes

SA...SAG series junction boxes are made from aluminium alloy and given an electrostatically applied polyester coating containing stainless steel particles that is then baked at 200°C. This treatment ensures good UV as well as thermal stability, providing mechanical impact resistance and excellent resistance when exposed either to salt mist or to marine and other damp environments. SA and SAG series junction boxes are usually installed in industrial plants where there is a risk of explosion and fire, classified as Zone 1, 2, 21, 22; they are mainly used as junction boxes and/or for routing cables to control rooms for analogue or digital signals and for control, monitoring and signalling associated with equipment such as motors, pumps...etc., or for giving physical readings such as flow rate, level, temperature, pressure, etc.... The thickness of its walls (7mm) means the SAG series is suitable for direct connection with pipes and fittings featuring tapered threads. Cortem's custom solutions offer ATEX- and IECEx-certified components and application solutions devised for use in explosion hazard areas. The expert Cortem team endeavours to meet all customer requests.

Cortem Group labels its products with a non-removable adhesive label featuring a hologram and an alphanumerical univocal code, as a safety measure against the illegal sale of fakes so that all the products are guaranteed as original. Non-compliance with the International standards entails serious risks for the environment, especially for those working daily on the plants.

TYPE AND APPLICATION

Choosing an appropriate container is a key step in the project development process, making it essential to approach the decision systematically, evaluating all variables methodically: where our equipment is being installed, the environmental conditions on site, what degree of protection it must have, what space is available and how it is due to be set up. Once you have processed all this information, you should be able to determine which product best suits the design requirements in question.

ENVIRONMENTAL CONDITIONS

The first factor to consider is what environmental conditions the equipment is going to be installed in, whether it will be indoors or outside, and what environments it is required to operate in: pharmaceutical, chemical, petrochemical, food, shipbuilding, agricultural industries...

DIMENSIONS

The size of the space available for inserting the enclosure and its components must be determined early on in the process.

DESIGN

Taking into account the technical aspect, product design and appearance is also important in ensuring the equipment to be installed in the enclosure is integrated seamlessly. A Cortem team of experts is on hand every day to address your questions and come up with the best solutions. Cortem enclosures have passed:

- IP protection testing;
- IK strength testing;
- salt mist testing for corrosion resistance;
- heat resistance testing;
- low temperature resistance testing.

Application sectors:

Oil refineries | Chemical and petrochemical plants | Onshore plants | Offshore plants | Low temperatures | Fuel depots | Ships and shipbuilding | 100% Cortem product

CERTIFICATION DATA FOR ENCLOSURES WITH TERMINALS

Classification:	Group II	Category 2GD		
Installation: EN 60079.14	zone 1 - zone 2 (Gas)	zone 21 - zone 22 (Dust)		
Marking:	CE 0722 Ex II 2GD Ex eb IIC T6/T5/T4 Gb - Ex tb IIIC T75°C/T110°C Db IP66			
	CE 0722 Ex II 2GD Ex e ia IIC T6/T5/T4 Gb - Ex ia IIIC T75°C/T110°C Db IP66			
	CE 0722 Ex II 2GD Ex eb ia IIC T6/T5/T4 Gb - Ex ia tb IIIC T75°C/T110°C Db IP66			
Certification:	ATEX CESI 03 ATEX 333			
	IEC Ex CES 13.0001	All IEC Ex, TR CU, INMETRO and UL certification data can be downloaded from www.cortemgroup.com		
	ECASEx AVAILABLE			
	INMETRO DNV 15.0119			
	UL E550165			
Standards:	CENELEC EN 60079-0: 2018, EN 60079-7: 2015, EN 60079-11: 2012, EN 60079-31: 2014 and EUROPEAN DIRECTIVE 2014/34/UE IEC 60079-0: 2017, IEC 60079-7: 2015, IEC 60079-11: 2011, IEC 60079-31: 2013			
Ambient Temp.:	See "ambient temperature range" table			
Degree of protection:	IP66			

AMBIENT TEMPERATURE RANGE

AMBIENT TEMPERATURE	TEMPERATURE CLASS	MAXIMUM SURFACE TEMPERATURE	MAXIMUM TERMINAL OPERATING TEMPERATURE
-40°C +40°C	T6	T75°C	+80°C
-40°C +55°C	T5	T75°C	+95°C

LOW AND HIGH TEMPERATURE RANGE
(accordingly with the temperature allowed by the terminals)

AMBIENT TEMPERATURE	TEMPERATURE CLASS	MAXIMUM SURFACE TEMPERATURE	MAXIMUM TERMINAL OPERATING TEMPERATURE
-60°C +40°C	T6	T75°C	+80°C
-60°C +55°C	T5	T75°C	+95°C
-60°C +65°C**	T5	T75°C	+95°C

** For this temperature range the maximum dissipated power shall be reduced by 25% and the nominal current by 15%

TEMPERATURE RANGE FOR SIGNALING
(max. 1 A for not Ex i circuits, max. 100 mA for 'Ex i' circuits)

AMBIENT TEMPERATURE	TEMPERATURE CLASS	MAXIMUM SURFACE TEMPERATURE	MAXIMUM TERMINAL OPERATING TEMPERATURE
-40°C +60°C	T6	T75°C	+80°C

TEMPERATURE RANGE FOR SIGNALING
(max. 10 A for not Ex i circuits, max. 100 mA for 'Ex i' circuits)

AMBIENT TEMPERATURE	TEMPERATURE CLASS	MAXIMUM SURFACE TEMPERATURE	MAXIMUM TERMINAL OPERATING TEMPERATURE
-60°C +85°C	T4	T110°C	+120°C

CERTIFICATION DATA OF ENCLOSURES FOR CONTROL, MONITORING AND SIGNALLING UNITS

Classification:	Group II	Category 2GD		
Installation: EN 60079.14	zone 1 - zone 2 (Gas)	zone 21 - zone 22 (Dust)		
Marking:	CE 0722 Ex II2GD - Ex db eb IIC T6/T5 Gb - Ex tb IIIC T85°C/T100°C Db - IP66			
	CE 0722 Ex II2GD - Ex eb IIC T6/T5 Gb - Ex tb IIIC T85°C/T100°C Db - IP66 (When on the box is installed only ammeter or voltmeter type B-0140)			
Certification:	ATEX CESI 03 ATEX 115 X			
	IEC Ex CES 11.0032 X	All IEC Ex, TR CU and INMETRO certification data can be downloaded from www.cortemgroup.com		
	ECASEx AVAILABLE			
	TR CU AVAILABLE			
	INMETRO DNV 15.0125			
Standards:	CENELEC EN 60079-0: 2018, EN 60079-1: 2014, EN 60079-7: 2015, EN 60079-11: 2012, EN 60079-18: 20150 EN 60079-31: 2014, EN 60529: 1991 and EUROPEAN DIRECTIVE 2014/34/UE IEC 60079-0: 2017, IEC 60079-1: 2014, IEC 60079-7: 2015, IEC 60079-11: 2011, IEC 60079-18: 2014, IEC 60079-31:2013, IEC 60529: 2001			
Ambient Temp.:	-40°C +40°C	With temperature class T6 and maximum surface temperature T85°C.		
	-40°C +55°C	With temperature class T5 and maximum surface temperature T100°C.		
Degree of protection:	IP66			

CERTIFICATION DATA OF ENCLOSURES WITH EQUIPMENT (FIELDBUS, PROXIMITOR, HEATER...)

Classification:	Group II	Category 2GD		
Installation: EN 60079.14	zone 1 - zone 2 (Gas)	zone 21 - zone 22 (Dust)		
Marking:	CE 0722 Ex II2GD - Ex eb IIC T6/T5 Gb - Ex tb IIIC T85°C/T100°C Db - IP66			
	CE 0722 Ex II2(1)GD - Ex eb ib mb [ia Ga] IIC T4 Gb - Ex tb [ia Da] IIIC T85°C Db IP66			
Certification:	ATEX CML 16 ATEX 3163X			
	IEC Ex CML 16.0074X	All IEC Ex certification data can be downloaded from www.cortemgroup.com		
Standards:	CENELEC EN 60079-0: 2018, EN 60079-7: 2015+A1:2018, EN 60079-28: 2015, EN 60079-31: 2024 and EUROPEAN DIRECTIVE 2014/34/UE IEC 60079-0: 2017, IEC 60079-7: 2017, IEC 60079-28: 2015, IEC 60079-31:2022			
Ambient Temp.:	-60°C +85°C	The temperature classes and the maximum surface temperature must be selected according to the installed components. See the certificate.		
Degree of protection:	IP66			

SA and SAG SERIES ENCLOSURES

Models from SA-...series (lightweight series)
Thinner walls
The body can only accommodate through holes with no threading

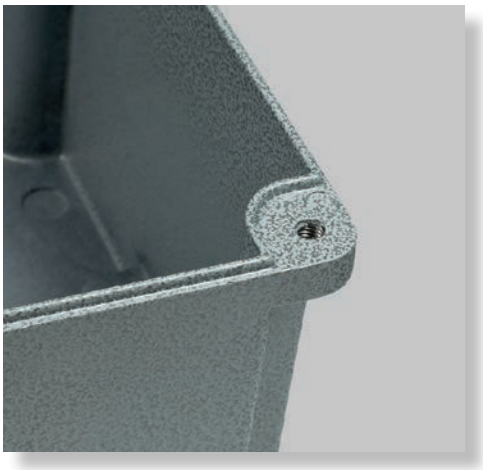

Models from SAG-...series (heavy-duty series)
Extra-thick walls
The body can also accommodate threaded holes

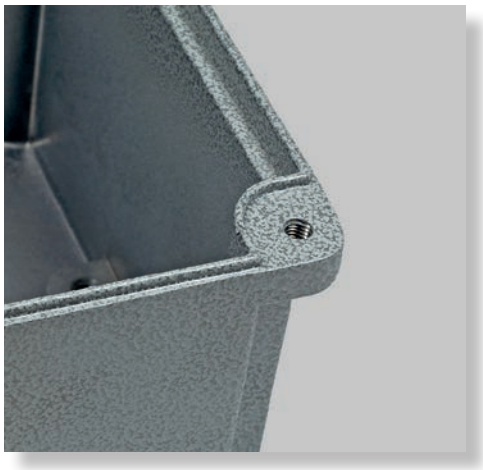

GENERAL MECHANICAL PROPERTIES

Body and lid:	Low copper content aluminium alloy
Impact protection rating:	IK10
Gasket:	Silicone, located between body and lid
Certification label:	Aluminium plate riveted onto lid
Bolts and screws:	Stainless steel captive variety
Earth screws:	Stainless steel. On inside and outside of body complete with anti-rotation brackets
Mounting:	Cast aluminium feet for M6 screw
Coating:	Polyester RAL 7035 (Light grey) for Exe or RAL 5015 (Sky blue) for Exi
Corrosion Resistance:	The STANDARD of the aluminium alloy used by Cortem has passed the tests required by standards EN 60068-2-30 (hot/humid cycles) and EN 60068-2-11 (salt mist tests)

ACCESSORIES AVAILABLE ON REQUEST/ SPECIAL REQUESTS

Possible drilling of the enclosure bottom A maximum of one hole in the center is allowed, 1" NPT o ISO M32x1,5.
Internal anti-condensation coating RAL 2004 (pure orange)
External polyester coating in different colour (specify the RAL number)
Breather valve; Drain valve
Internal mounting plate: stainless steel (code B...-229)
Earth screws in stainless steel
Terminal block mounting rails (code OBO2060/S)
ATEX-CERTIFIED TERMINALS: terminals must be chosen from the list of approved manufacturers: Cabur, Phoenix, ABB Entrelec, Wago, Weidmuller. When supplied as an Ex i enclosure (for low-voltage instruments), it comes with suitably identified blue terminals.
Only use cable glands that meet ATEX, IECEx directive requirements. Use gaskets and lock nuts on entries to ensure IP66 protection.

OVERVIEW OF SIZES

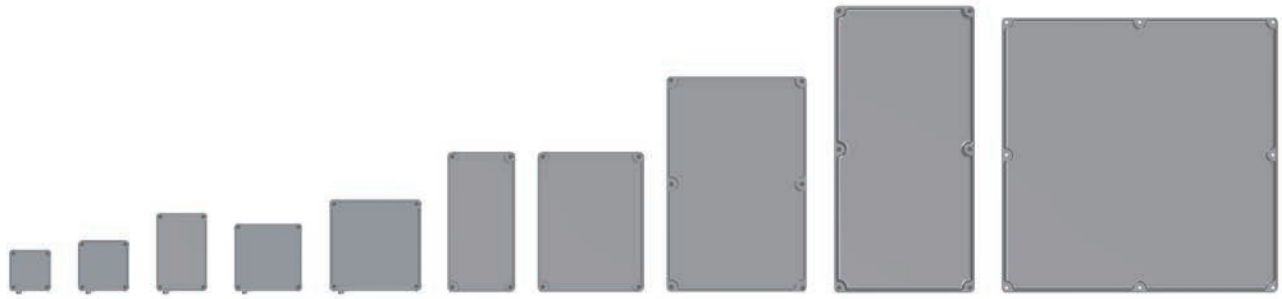

ENCLOSURE SELECTION CHART

Code	External dimensions			Inner dimensions					Fixing				Weight
	A	B	C	a	b	c	S1	S2	X	Y	X1	ØD	Kg
SA090907	90	90	73	84	84	54	3	2.5	74	74	-	6.5	0.40
SA111108	110	110	83	104	104	64	3	2.5	94	94	-	6.5	0.50
SAG111108	110	110	83	96	96	64	7	2.5	94	94	-	6.5	0.75
SA171108	170	110	83	164	104	65	3	2.5	154	94	-	6.5	0.80
SAG171108	170	110	83	156	96	65	7	2.5	154	94	-	6.5	1.55
SA141410	147	147	100	141	141	80	3	2.5	131	131	-	6.5	0.80
SAG141410	147	147	100	133	133	80	7	2.5	131	131	-	6.5	1.40
SA202012	200	200	120	192	192	98	4	3	180	180	-	6.5	1.70
SA301410	305	147	110	296	138	90	4.5	3	285	127	-	6.5	2.00
SAG301410	305	147	110	291	133	90	7	4	285	127	-	6.5	2.70
SA302310	305	230	110	296	221	90	4.5	3	285	210	-	6.5	2.80
SAG302310	305	230	110	291	216	90	7	4	285	210	-	6.5	3.40
SA302318	305	230	190	296	221	165	4.5	3	285	210	-	6.5	3.50
SAG302318	305	230	190	291	216	165	7	4	285	210	-	6.5	5.30
SA473018	475	305	195	465	295	174	5	4	450	285	225	6.5	6.50
SAG473018	475	305	195	461	294	174	7	4	450	285	225	6.5	8.90
SAG623018	625	305	195	613	293	174	6	5	605	285	302.5	6.5	11.3
SAG606018	600	600	205	584	584	177	10-13	5	580	580	290	8	27.0

Dimensions in mm

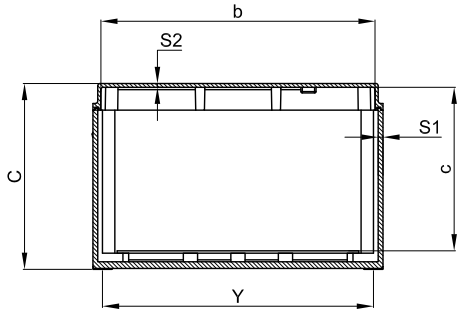

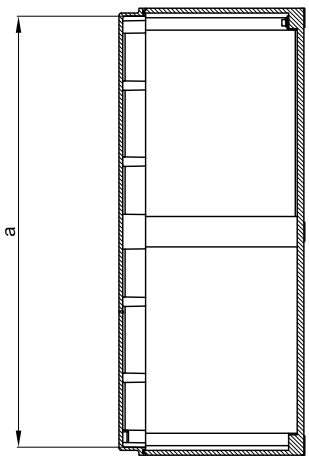

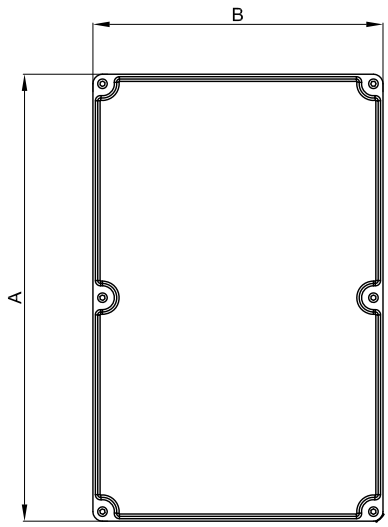

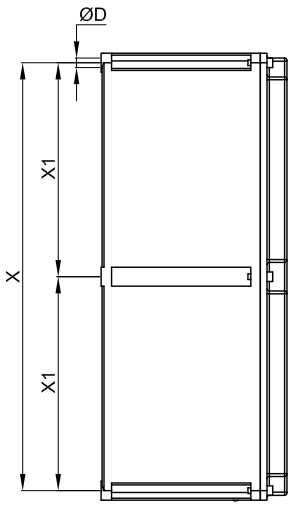

THREAD COMPARISON CHART

D Thread diameter	01	1	2	3	4	5	6	7	8
ISO228	3/8"	1/2"	3/4"	1"	1 1/4"	1 1/2"	2"	2 1/2"	3"
Through hole	Ø17	Ø22	Ø27.5	Ø34	Ø43	Ø48.5	Ø60.5	Ø76	Ø89

D Thread diameter	01	1	2	3	4	5	6	7	8
ISO 261/965	16x1,5	20x1.5	25x1.5	32x1.5	40x1.5	50x1.5	63x1.5	75x1.5	90x1.5
Through hole	Ø17	Ø20.5	Ø25.5	Ø32.5	Ø40.5	Ø50.5	Ø63.5	Ø75.5	Ø90,5

D Thread diameter	01	1	2	3	4	5	6	7	8
ANSI B.20.1 NPSM	3/8"	1/2"	3/4"	1"	1 1/4"	1 1/2"	2"	2 1/2"	3"
Through hole	Ø17.5	Ø22	Ø27.5	Ø34	Ø43	Ø48.5	Ø60.5	Ø76	Ø89

As required by the current standard, holes can be drilled by Cortem or by authorized partners who hold a production notification in accordance with ATEX Directive .

TYPE OF ENCLOSURE	HOLE DRILLING IN BODY																			
	Sides A and C										Sides B and D									
	Drilling area mm	MAXIMUM QUANTITY PER HOLE TYPE									Drilling area mm	MAXIMUM QUANTITY PER HOLE TYPE								
		01	1	2	3	4	5	6	7	8		01	1	2	3	4	5	6	7	8
SA090907	48x45	1	1	1	-	-	-	-	-	-	48x45	Square box								
SA/SAG111108	58x55	3	2	1	1	-	-	-	-	-	58x55	Square box								
SA/SAG171108	68x55	3	2	1	1	-	-	-	-	-	128x55	5	5	3	2	2	2	-	-	-
SA/SAG141410	100x65	6	6	3	2	1	-	-	-	-	100x65	Square box								
SA202012	145x75	8	7	6	3	2	1	-	-	-	145x75	Square box								
SA/SAG301410	90x65	6	4	3	1	1	1	-	-	-	250x65	14	12	9	5	4	3	-	-	-
SA/SAG302310	180x65	10	10	7	3	3	2	-	-	-	255x65	14	12	9	5	4	3	-	-	-
SA/SAG302318	180x140	18	18	12	9	6	4	2	1	1	258x140	24	24	18	14	8	6	3	2	2
SA/SAG473018	258x140	24	24	18	14	8	6	3	2	1	380x140	36	36	24	18	12	12	4	4	2
SAG623018	250x140	24	24	18	14	8	6	3	3	2	525x140	48	48	36	28	16	12	6	4	4
SAG606018	420x130	40	40	30	25	12	12	4	4	4	420x130	35	35	26	16	10	10	4	4	4

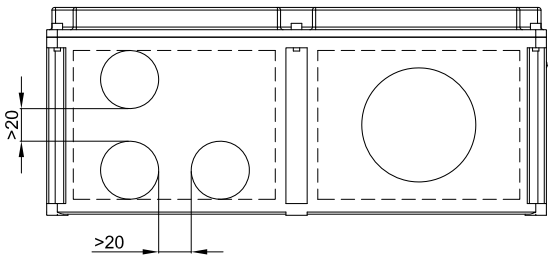

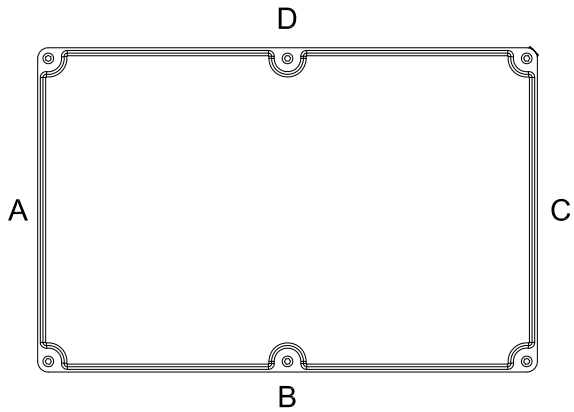

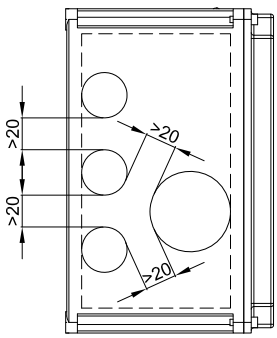

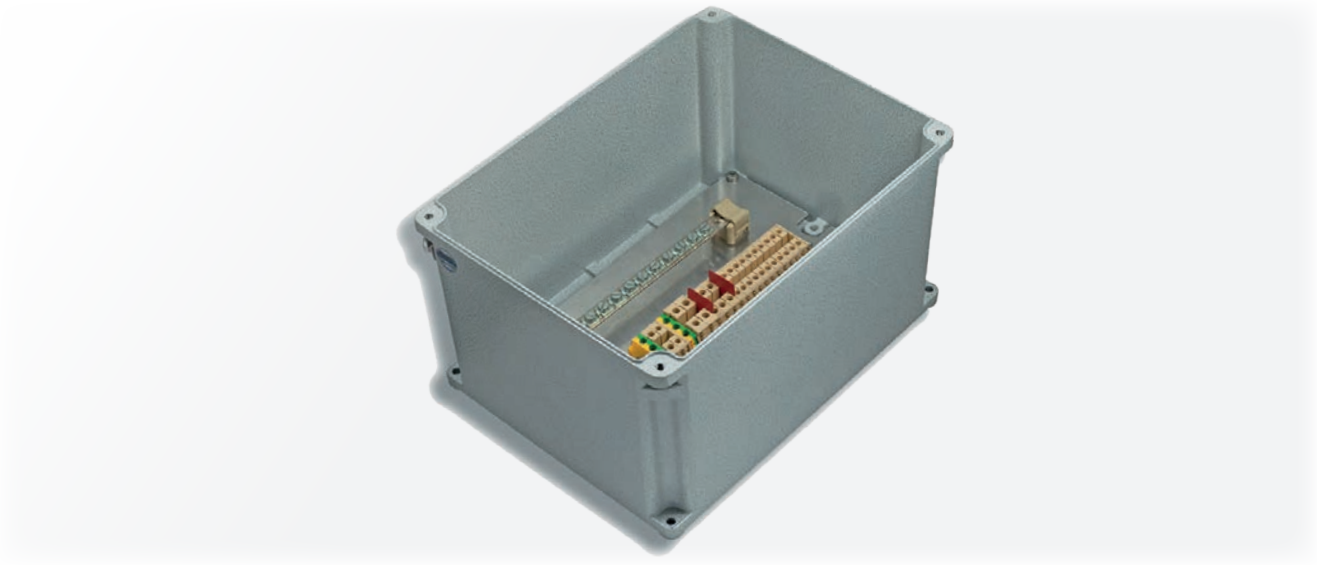

These enclosures are customized based on size, on the number of terminals or cables they are due to accommodate, or taking into account the number of cable entries and cabling requirements inside a system. Hence we can produce tailor-made solutions as long as you provide us with the appropriate parameters required at the quote request stage, such as the number of cable glands, unions or sealing fittings to be installed, so that we can determine the most suitable size of enclosure. All terminals can be fitted with your requested accessories and mounted on special rails that are fastened to the enclosure's internal mounting frames. Terminal strips can be arranged in various ways, as specified by the customer and always within the limits allowed by the certificate. The options are vertical, horizontal, in a number of rows, or on different levels using suitable spacers.

ELECTRICAL FEATURES

	Standard applications	Signal circuits applications	
		T6/T75°C max. Tamb +60°C	T4/T100°C max. Tamb +85°C
Rated voltage:	1000 Vac/dc	-	-
Rated current:	312 A	1 A for exec. **Ex eb** 100 mA for exec. **Ex ia**	10 A for exec. **Ex eb** 100 mA for exec. **Ex ia**
Rated frequency:	50/60 Hz	-	-
Terminal section:	1.5 ÷ 300 mm^2	-	-

Marking	Terminal type	Description
Ex II 2GD Ex eb IIC T... Gb - Ex tb IIIC T... Db IP66	Ex e terminals only	Enclosures containing increased safety terminals to standard EN 60079-7
Ex II 2GD Ex eb ia IIC T... Gb - Ex tb ia IIIC T... Db IP66	Ex e and Ex i terminals	Enclosures containing increased safety terminals and intrinsic safety terminals to standards EN 60079-7 and EN 60079-11
Ex II 2GD Ex ia IIC T... Gb - Ex ia IIIC T... Db IP66	Ex i terminals only	Enclosures containing intrinsic safety terminals to standard EN 60079-11; enclosures are still category 2

Examples of terminal strips with minimum installation distances

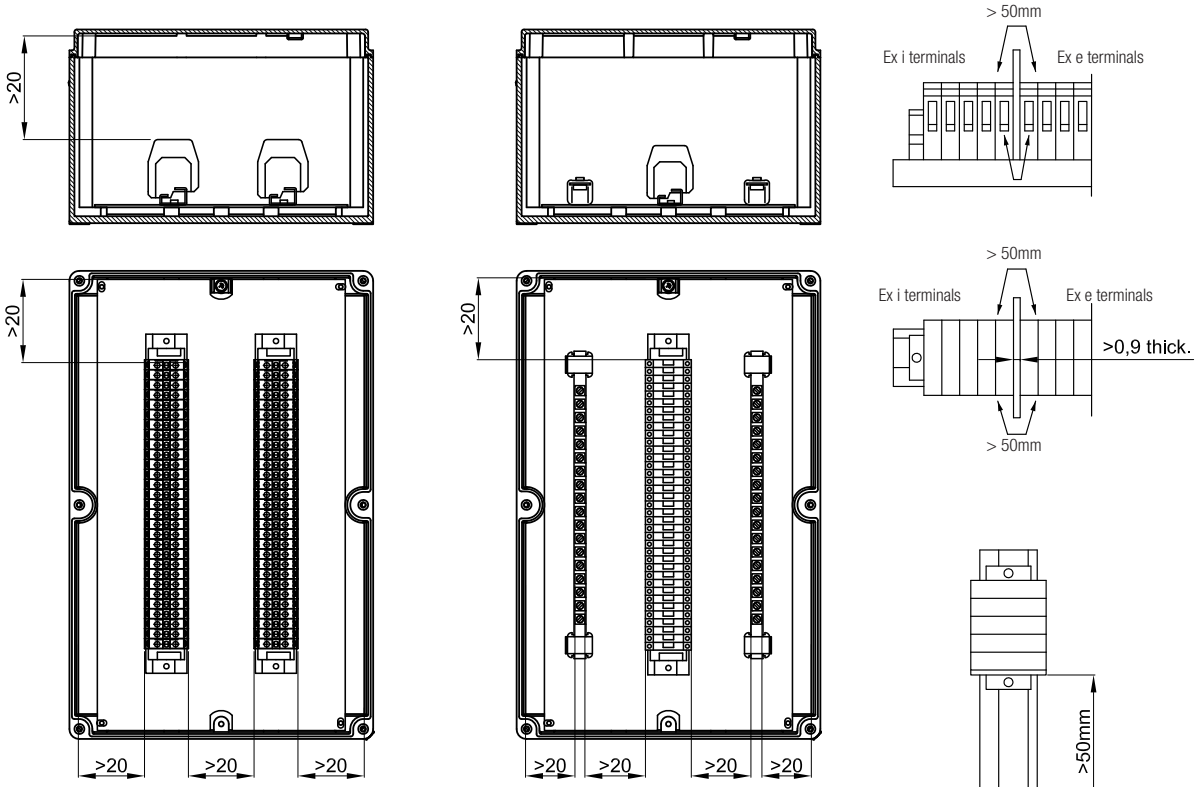

Notes:
Reference must be made to the minimum distances given, bearing in mind the space required for internal wiring.
Only ATEX-certified terminals are allowed inside the enclosures.
Ex i rated terminals must be suitably labelled or coloured differently so they are clearly identifiable.
Ex i cable entries must be suitably identified with either labelling or blue markings on cable glands or the enclosure's sides.

TYPE OF ENCLOSURE	MAXIMUM NUMBER OF TERMINALS HOUSED															
	TERMINAL CROSS-SECTIONAL AREA															
	1.5	2.5	4	6	10	16	25	35	50	70	95	120	150	185	240	300
SA090907	11	7	6	5	-	-	-	-	-	-	-	-	-	-	-	-
SA/SAG111108	16	11	9	7	5	-	-	-	-	-	-	-	-	-	-	-
SA/SAG171108	32	22	19	14	11	9	-	-	-	-	-	-	-	-	-	-
SA/SAG141410	26	18	15	11	9	7	5	-	-	-	-	-	-	-	-	-
SA202012	2x40	2x28	2x23	17	13	11	8	-	-	-	-	-	-	-	-	-
SA/SAG301410	69	48	40	30	24	20	14	-	-	-	-	-	-	-	-	-
SA/SAG302310	2x70	2x48	2x40	2x30	2x24	2x20	15	-	-	-	-	-	-	-	-	-
SA/SAG302318	2x70	2x48	2x40	2x30	2x24	2x20	15	15	13	11	-	-	-	-	-	-
SA/SAG473018	2x116	2x81	2x68	2x51	2x40	2x33	2x25	2x25	2x22	2x19	14	12	12	11	11	-
SAG623018	2x159	2x111	2x93	2x69	2x55	2x46	2x34	2x34	2x30	2x27	20	17	17	15	15	-
SAG606018	5x142	5x99	5x83	5x62	5x49	5x41	4x31	4x31	3x27	3x24	18	15	15	13	13	-

Eg. 2x22= 2 rows of 22 terminals (total 44 terminals). The maximum number of standard terminals refers to the mounting of CABUR and/or WEIDMULLER terminals.
The data in the table are given as a rough guide only based solely on the size of the enclosures and the space taken up by the terminals.

The permissible maximum power dissipation, in order to retain a T6 temperature class with an ambient temperature up to 40°C or T5 class with an ambient temperature of 55°C, is not to exceed the values given in the tables below.
For an ambient temperature of +60°C or +65°C, maximum power dissipation must be reduced by 25%, and rated current reduced by 15%.

The maximum current values for terminal boxes used for low current circuits (signals) with temperature class T6 and maximum ambient temperature +60°C or T4 and maximum ambient temperature +65°C and +85°C are always as given below:
+60°C T6 -> max 1A Ex e, max 100mA Ex ia
+85°C T4 -> max 10A Ex e, max 100mA Ex ia
On the following pages, the table values refer to the maximum number of conductors allowed for a conductor with a given cross-sectional area and subject to a given maximum current. All incoming wires and internal links (made by wires) count as wires; earth connections do not count.

When mounting rails are installed on the internal mounting plate (and not directly on internal ribs of boxes), the number of terminals may be slightly less than the number indicated in the tables.
Other types of terminals can be used up to the space limit of the box. Whatever the case, the terminals used shall be ATEX and/or IECEx certified. Size 35mm^2 terminals can be used for conductors with a cross-sectional area of 25mm^2.

The maximum number of terminals and the maximum number of rows shown in the tables is an indicative value; pay attention to the cable entries installed on the sides of boxes. The internal overall dimensions of cable glands and the overall dimensions of conductors must be taken into consideration to allow for wiring.
In some cases, it may be necessary to reduce the number of terminals or the number of rows.

Example for the calculation of the maximum number of conductors.
Refer to table for SA141410: 6 conductors with 6mm^2 cross-section with 26A continuous current is the limit of this box. Consequently, SA141410 is suitable for containing 3 x 6mm^2 terminals (2 conductors for each terminal) with a max. current of 26A. There is space for 11 x 6mm^2 terminals in the box. The remaining 8 terminals (11-3) can be added and used for low current circuits indicated in area "yellow" of the table (in this case max. 8-10A).

Combined mounting for electrical circuits with different sized cables is possible provided the values given are used proportionally. For example:

Nominal X-sect. area (mm^2)	Current (A)	Quantity	Capacity
2,5	8	16 (di 46)	34,8%
4	11	12 (di 36)	33,3%
10	26	4 (di 13)	30,8%
		Total	98,9% <100%

Table showing maximum power dissipation and current for ambient temperature +40°C and +55°C

Enclosure	P [W]	Maximum current [A] per conductor cross-sectional area in mm²															
		1.5	2.5	4	6	10	16	25	35	50	70	95	120	150	185	240	300
SA090907	5.6	11	15	21	26	37	49	67	-	-	-	-	-	-	-	-	-
SA111108	7.5	11	15	21	26	37	49	67	-	-	-	-	-	-	-	-	-
SA171108	8.8	11	15	21	26	37	49	67	-	-	-	-	-	-	-	-	-
SA141410 SA202012	7.8	11	15	21	26	37	49	67	-	-	-	-	-	-	-	-	-
SA301410	15	11	15	21	26	37	49	67	-	-	-	-	-	-	-	-	-
SA302310	16	11	15	21	26	37	49	67	-	-	-	-	-	-	-	-	-
SA302318	17.5	11	15	21	26	37	49	67	80	98	122	147	175	196	196	196	227
SA473018	42	11	15	21	26	37	49	67	80	98	122	147	175	196	227	270	312
SAG090907	5.6	11	15	21	26	37	49	67	-	-	-	-	-	-	-	-	-
SAG111108	7.5	11	15	21	26	37	49	67	-	-	-	-	-	-	-	-	-
SAG171108	8.8	11	15	21	26	37	49	67	-	-	-	-	-	-	-	-	-
SAG141410 SAG202012	7.8	11	15	21	26	37	49	67	-	-	-	-	-	-	-	-	-
SAG301410	15	11	15	21	26	37	49	67	-	-	-	-	-	-	-	-	-
SAG302310	16	11	15	21	26	37	49	67	-	-	-	-	-	-	-	-	-
SAG302318	17.5	11	15	21	26	37	49	67	80	98	122	147	175	196	196	196	227
SAG473018	42	11	15	21	26	37	49	67	80	98	122	147	175	196	227	270	312
SAG623018 SAG606018	52	11	15	21	26	37	49	67	80	98	122	147	175	196	227	270	312

Table showing maximum power dissipation and current for ambient temperature +60°C and +65°C

Enclosure	P [W]	Maximum current [A] per conductor cross-sectional area in mm²															
		1.5	2.5	4	6	10	16	25	35	50	70	95	120	150	185	240	300
SA090907	4.2	9	12	17	22	31	41	57	-	-	-	-	-	-	-	-	-
SA111108	5.6	9	12	17	22	31	41	57	-	-	-	-	-	-	-	-	-
SA171108	6.6	9	12	17	22	31	41	57	-	-	-	-	-	-	-	-	-
SA141410 SA202012	5.8	9	12	17	22	31	41	57	-	-	-	-	-	-	-	-	-
SA301410	11.2	9	12	17	22	31	41	57	-	-	-	-	-	-	-	-	-
SA302310	12	9	12	17	22	31	41	57	-	-	-	-	-	-	-	-	-
SA302318	13.1	9	12	17	22	31	41	57	68	83	103	125	148	166	166	166	193
SA473018	31.5	9	12	17	22	31	41	57	68	83	103	125	148	166	193	229	265
SAG090907	4.2	9	12	17	22	31	41	57	-	-	-	-	-	-	-	-	-
SAG111108	5.6	9	12	17	22	31	41	57	-	-	-	-	-	-	-	-	-
SAG171108	6.6	9	12	17	22	31	41	57	-	-	-	-	-	-	-	-	-
SAG141410 SAG202012	5.8	9	12	17	22	31	41	57	-	-	-	-	-	-	-	-	-
SAG301410	11.2	9	12	17	22	31	41	57	-	-	-	-	-	-	-	-	-
SAG302310	12	9	12	17	22	31	41	57	-	-	-	-	-	-	-	-	-
SAG302318	13.1	9	12	17	22	31	41	57	68	83	103	125	148	166	166	166	193
SAG473018	31.5	9	12	17	22	31	41	57	68	83	103	125	148	166	193	229	265
SAG623018 SAG606018	39	9	12	17	22	31	41	57	68	83	103	125	148	166	193	229	265

Instructions for determining which enclosure is best suited based on the planned number of conductors and terminals.

: In this unfilled area, provided the relevant instructions are followed and the permitted measurements given for devices housed inside the enclosure are complied with, any number of terminals can be added up to the space limit of the box.

: Fitting in this unfilled area is not covered by this certification.

"***C. No.***" row: values shown in the cells define the maximum number of CABUR terminals physically allowed inside the relevant enclosure. These values are expressed as a product of the rows multiplied by the number of terminals on each row.
"***W. No.***" row: the same as above, but referred to the Weidmuller terminals.
The terminal brands are mentioned just to give an idea of the number of terminals that can be installed inside the enclosures.
The other values shown in the cells along the table's diagonal define the maximum number of conductors allowed, depending on their cross-sectional area and the maximum current that flows through them.

Tables showing maximum number of conductors

$$\left(\text{N° of terminals} = \frac{\text{n° of conductors}}{2}\right)$$

SA090907

Current (A)	Cross-sectional area in mm²						
	1.5	2.5	4	6	10	16	25
1							
8	17						
10	11						
11	9	15					
15		8	11				
21			6	7	10		
26				5	7	9	
37					3	4	6
49						3	3
67							2
C. No.							
W. No.	11	7	6	5			

Maximum power dissipation with T6 temperature class must not exceed 5.6W

SA111108, SAG111108

Current (A)	Cross-sectional area in mm²						
	1.5	2.5	4	6	10	16	25
1							
8	19	32					
10	12	20	29				
11	10	17	24				
15		9	13	17			
21			6	9	12		
26				6	8	11	
37					4	5	7
49						3	4
67							2
C. No.							
W. No.	16	11	9	7	5		

Maximum power dissipation with T6 temperature class must not exceed 7.5W

SA141410, SAG141410

Current (A)	Cross-sectional area in mm²						
	1.5	2.5	4	6	10	16	25
1							
8	19	32					
10	12	20	29				
11	10	17	24	32			
15		9	13	17	25		
21			7	9	13	18	23
26				6	8	11	15
37					4	6	7
49						3	4
67							2
C. No.		16	14	11	9	7	5
W. No.	26	18	15	11	9	7	5

Maximum power dissipation with T6 temperature class must not exceed 7.8W

SA171108, SAG171108

Current (A)	Cross-sectional area in mm²						
	1.5	2.5	4	6	10	16	25
1							
8	21	35					
10	14	23	32				
11	11	19	27	36			
15		10	14	19	28	38	
21			7	10	14	19	26
26				6	9	13	17
37					5	6	8
49						4	5
67							3
C. No.							
W. No.	32	22	19	14	11	9	

Maximum power dissipation with T6 temperature class must not exceed 8.8W

SA202012

Current (A)	Cross-sectional area in mm²						
	1.5	2.5	4	6	10	16	25
1							
8	19	32					
10	12	20	29				
11	10	17	24	32			
15		9	13	17	25		
21			7	9	13	18	23
26				6	8	11	15
37					4	6	7
49						3	4
67							2
C. No.		2x25	2x21	17	13	11	8
W. No.	2x40	2x28	2x23	17	13	11	8

Maximum power dissipation with T6 temperature class must not exceed 7.8W

SA301410, SAG301410

Current (A)	Cross-sectional area in mm²						
	1.5	2.5	4	6	10	16	25
1							
8	27	46	67				
10	18	29	43	59	90		
11	15	24	36	49	74		
15		13	19	26	40	56	79
21			10	13	20	29	40
26				9	13	19	26
37					7	9	13
49						5	7
67							4
C. No.		43	37	30	24	20	14
W. No.	69	48	40	30	24	20	14

Maximum power dissipation with T6 temperature class must not exceed 15W

SA302310, SAG302310

Current (A)	Cross-sectional area in mm²						
	1.5	2.5	4	6	10	16	25
1							
8	27	46	68	94	142		
10	18	29	43	60	91		
11	15	24	36	50	75	107	
15		13	19	27	41	58	81
21			10	14	21	29	41
26				9	13	19	27
37					7	9	13
49						5	8
67							4
C. No.		2x44	2x37	2x30	2x24	2x20	15
W. No.	2x70	2x48	2x40	2x30	2x24	2x20	15

Maximum power dissipation with T6 temperature class must not exceed 16W

Tables showing maximum number of conductors

SA302318, SAG302318

Current (A)	Cross-sectional area in mm²															
	1.5	2.5	4	6	10	16	25	35	50	70	95	120	150	185	240	300
1																
8	30	49	73	102	155	223										
10	19	32	47	65	99	142	201									
11	16	26	39	54	82	118	166	210								
15		14	21	29	44	63	89	113	138							
21			11	15	23	32	45	58	71	90						
26				10	15	21	30	38	46	59	71					
37					7	10	15	19	23	29	35	40	45			
49						6	8	11	13	17	20	23	25	28	31	
67							4	6	7	9	11	12	14	15	17	11
80								4	5	6	8	9	10	11	12	8
98									3	4	5	6	6	7	8	5
122										3	3	4	4	5	5	5
147											2	3	3	3	3	4
175												2	2	2	2	3
196													2	2	2	2
227																2
C. No.		2x44	2x37	2x30	2x24	2x20	15	15	13	11						
W. No.	2x70	2x48	2x40	2x30	2x24	2x20	15	15	13	11						

Maximum power dissipation with T6 temperature class must not exceed 17.5W

SA473018, SAG473018

Current (A)	Cross-sectional area in mm²															
	1.5	2.5	4	6	10	16	25	35	50	70	95	120	150	185	240	300
1																
8	51	84	128	181	282	414										
10	32	54	82	116	180	265	383									
11	27	45	68	96	149	219	317	411								
15		24	36	51	80	118	170	221	278							
21			19	26	41	60	87	113	142	188						
26				17	27	39	57	74	92	122	154					
37					13	19	28	36	46	60	76	89				
49						11	16	21	26	34	43	51	59	68		
67							9	11	14	18	23	27	31	36	43	
80								8	10	13	16	19	22	25	30	23
98									7	9	11	13	15	17	20	15
122										6	7	8	9	11	13	15
147											5	6	7	8	9	10
175												4	5	5	6	7
196													4	4	5	6
227														3	4	4
270															3	3
312																2
C. No.		2x74	2x62	2x51	2x40	2x33	2x25	2x25	2x22	2x19	12	9	9	8	8	8
W. No.	2x116	2x81	2x68	2x51	2x40	2x33	2x25	2x25	2x22	2x19	14	12	12	11	11	

Maximum power dissipation with T6 temperature class must not exceed 42W

SAG623018

Current (A)	Cross-sectional area in mm²															
	1.5	2.5	4	6	10	16	25	35	50	70	95	120	150	185	240	300
1																
8	59	98	150	215	338	501										
10	38	63	96	137	216	321	469									
11	31	52	80	113	179	265	388	507								
15		28	43	61	96	142	208	273	346							
21			22	31	49	73	106	139	176	236						
26				20	32	47	69	91	115	154	196					
37					16	23	34	45	57	76	97	115				
49						13	20	26	32	43	55	65	76			
67							10	14	17	23	29	35	41	47		
80								10	12	16	21	25	29	33	40	31
98									8	11	14	16	19	22	26	20
122										7	9	11	12	14	17	20
147											6	7	8	10	12	14
175												5	6	7	8	10
196													5	6	7	8
227														4	5	6
270															3	4
312																3
C. No.		2x101	2x85	2x69	2x55	2x46	2x34	2x34	2x30	2x27	17	13	13	10	10	10
W. No.	2x159	2x111	2x93	2x69	2x55	2x46	2x34	2x34	2x30	2x27	20	17	17	15	15	

Maximum power dissipation with T6 temperature class must not exceed 52W

Tables showing maximum number of conductors

SAG606018

Current (A)	Cross-sectional area in mm²															
	1.5	2.5	4	6	10	16	25	35	50	70	95	120	150	185	240	300
1																
8	59	98	150	215	338	501										
10	38	63	96	137	216	321	469									
11	31	52	80	113	179	265	388	507								
15		28	43	61	96	142	208	273	346							
21			22	31	49	73	106	139	176	236						
26				20	32	47	69	91	115	154	196					
37					16	23	34	45	57	76	97	115				
49						13	20	26	32	43	55	65	76			
67							10	14	17	23	29	35	41	47		
80								10	12	16	21	25	29	33	40	31
98									8	11	14	16	19	22	26	20
122										7	9	11	12	14	17	20
147											6	7	8	10	12	14
175												5	6	7	8	10
196													5	6	7	8
227														4	5	6
270															3	4
312																3
C. No.		5x90	5x76	5x62	5x49	5x41	4x31	4x31	3x27	3x24	15	11	11	9	9	9
W. No.	5x142	5x99	5x83	5x62	5x49	5x41	4x31	4x31	3x27	3x24	18	15	15	13	13	

Maximum power dissipation with T6 temperature class must not exceed 52W

Codes of terminals used to determine maximum number of terminals/conductors.

The other values shown in the cells along the table's diagonal define the maximum number of conductors allowed, depending on their cross-sectional area and the maximum current that flows through them.

Sq mm	1.5	2.5	4	6	10	16	25	35
Cabur		CBD 2	CBD 4	CBD 6	CBD 10	CBD 16	CBD 35	
Weidmuller	WDU 1.5	WDU 2.5	WDU 4	WDU 6	WDU 10	WDU 16	WDU 35	

Sq mm	50	70	95	120	150	185	240	300
Cabur	CBD 50	CBD 70	GPM95/CC	GPM150/CC		GPM240/CC		
Weidmuller	WDU 50	WDU 70	WDU 70/95	WDU 120/150		WDU 240		

ATEX - IECEx label for terminal enclosures

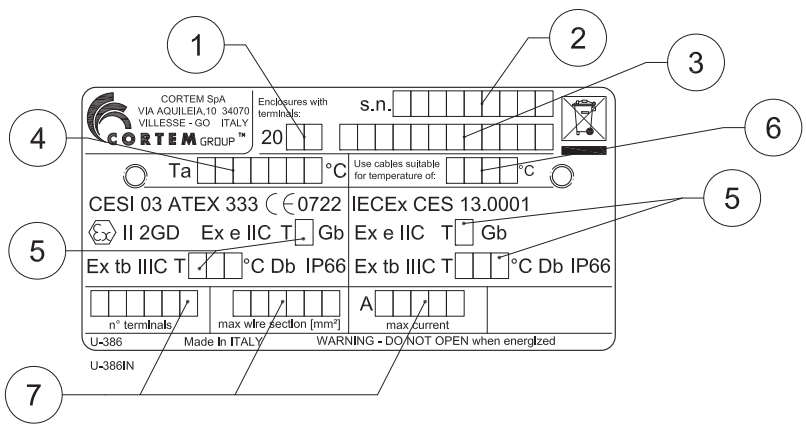

Data filled in:

1. year of manufacture
2. serial number
3. product code
4. ambient temperature
5. temperature class and maximum surface
6. temperature of cables
7. electrical specs per certificate

DON'T FORGET TO ORDER THE ACCESSORIES

Example: Enclosure type SA202012 + Internal mounting plate B20-229 + Cable glands, unions + other...see key

JUNCTION BOXES WITH EQUIPMENT (FIELDBUS, PROXIMITOR, HEATER...)

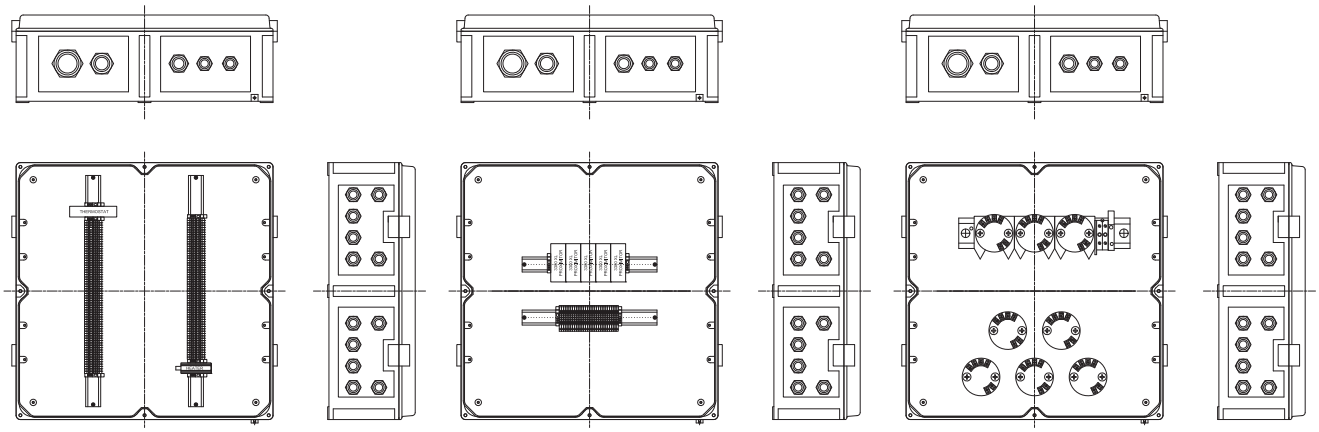

Example of junction box with thermostat

Example of junction box with proximitor

Example of junction box with transmitter

Equipment that can be installed in the junction boxes in accordance with the CML 16 ATEX 3163X or IECEx CML 16.0074X certificate are described in the following table:

Part	Number of certificate	Marking
Series 3300XL Proximitor	BAS 99 ATEX 1101 IECEx BAS 04.0055X	Ex ia IIC
Splice Cassette type 8186	PTB 10 ATEX 2015U IECEx PTB 10.0060U	Ex op pr IIC
Enclosure Heater (TEF Series)	NEMKO 11 ATEX 1098X IECEx NEM 11.0005X	Ex e IIC; Ex e mb IIC
Heater, type SL.. THERM D.. T..	PTB 02 ATEX 1116X IECEx PTB 07.0055X	Ex db IIC; Ex tb IIIC
Heater, type CP.. THERM D.. T..	PTB 02 ATEX 1041X IECEx PTB 07.0052X	Ex db IIC; Ex tb IIIC
Fieldbus Segment protector type R-SP-E	PTB 04 ATEX 2100X IECEx PTB 05.0010X	Ex e mb IIC; Ex eb mb IIC
Temperature Trasmitter Model IPAQ C202X	KIVA 15 ATEX 0033X IECEx KIWA 15.0015X	Ex ia IIC
Temperature Trasmitter Model IPAQ C520X	KIVA 14 ATEX 0003X IECEx KIWA 14.0001X	Ex ia IIC
Fieldbus Barrier type R4D0-FB-IA	BVS 13 ATEX E 121X IECEx BVS 13.0119X	Ex e ib mb [ia Ga] IIC T4 Gb Ex e ib mb [ia IIIC Da] IIC T4 Gb
Heating Resistor type CREx 020	LCIE 01 ATEX 6073X IECEx LCI 07.0020X	Ex d IIC; Ex tb IIIC
Regulating Thermostat type REx	LCIE 01 ATEX 6074 IECEx LCI 07.0021	Ex d IIC; Ex tb IIIC
Interconnection block for fieldbus type F240 to F273	KEMA 03 ATEX 1555X IECEx LCI 11.0068X	Ex ia IIC
Fieldbus XE Megablock and Terminator	KEMA 05 ATEX 2006 IECEx DEK 16.0036X	Ex eb mb IIC
Model 644R HART Temperature Transmitter	BAS 00 ATEX 1033X IECEx BAS 07.0053X	Ex ia IIC
Model 644H Fieldbus Temperature Trasmitter	BAS 03 ATEX 0499X IECEx BAS 07.0053X	Ex ia IIC
Enhanced model 644 Temperature Transmitter	BAS 12 ATEX 0101X IECEx BAS 12.0069X	Ex ia IIC
Transmitter Type T32.**.*-*	BVS 08 ATEX 019X IECEx BVS 08.0018X	Ex ia IIC
Load isolation Switch Module CZ0513 Series	CML 19 ATEX 1179U IECEx CML 19.0055U	Ex db eb IIC Gb
Handle of switch CZ8000	CML 17 ATEX 3102U IECEx CML 17.0042U	Ex eb IIC; Ex tb IIIC
Operators M-0603, M-0604,M-0605	CESI 09 ATEX 075U IECEx CES 11.0029U	Ex eb IIC; Ex tb IIIC
Pilot LED M-0612 and M-0487	CESI 09 ATEX 060U IECEx CES 11.0030U	Ex db IIC; Ex db eb IIC; Ex tb IIIC
Contact blocks type M-0530 and M-0531	CESI 09 ATEX 016U IECEx CES 11.0031U	Ex de IIC
Ammeter type B-0140A and Voltmeter B-0140V	CESI 04 ATEX 128U IECEx CES 12.0022U	Ex e IIC; Ex tb IIIC
Temperature transmitter iTEMP Type TMT82..A1/2 and TMT82..A3/4/5	EPS 17 ATEX 1074X IECEx EPS 17.0039X	Ex ia IIC
Surge protector type Blitzductor Connect BCO *L2 BD EX 24	TUV 19 ATEX 8476X IECEx TUR 20.0025X	Ex ia [ia Ga] IIC Gb; Ex ib IIC T6 Gb; [Ex ia Da] IIIC

Attention: please contact our sales office for further information.

ILLUSTRATION	DESCRIPTION	MODEL	DIMENSIONS A	DIMENSIONS B	CODE	KEY
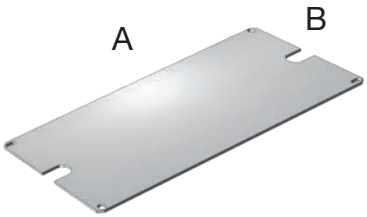	Internal mounting plates Thickness 2.5mm Aluminium Galvanized steel (B...-229AC) Stainless steel (B...-229IN)	SA090907	82	48	**B09-229**	ACCESSORIO RICAMBIO
		SAG090907	73	48	**B09-229P**	
		SA111108	100	68	**B11-229**	
		SAG111108	92	68	**B11-229P**	
		SA141410	137	105	**B14-229**	
		SAG141410	129	105	**B14-229P**	
		SA171108	159	67	**B17-229**	
		SAG171108	152	67	**B17-229P**	
		SA202012	186	146	**B20-229**	
		SA/SAG301410	285	97	**B31-229**	
		SA/SAG302310 SA/SAG302318	285	180	**B32-229**	
		SA/SAG473018	453	254	**B43-229**	
		SA/SAG623018	603	249	**B63-229**	
		SAG606018	532	532	**B60-229**	

ILLUSTRATION	DESCRIPTION	MODEL	FEATURES	CODE	KEY
	Breather and drain valve	3/8" ISO 7/1	Material: stainless steel	**ECD-210S**	ACCESSORIO RICAMBIO
	Breather valve	ISO M20x1,5	Material: stainless steel	**ECDE-B1B**	ACCESSORIO RICAMBIO
		ISO M25x1,5		**ECDE-B2B**	
	Breather and drain valve	ISO M20x1,5		**ECDE-D1B**	
		ISO M25x1,5		**ECDE-D2B**	
	Hinges (2 per enclosure)	Low lid enclosures	Material: stainless steel	**B-0105/R**	ACCESSORIO RICAMBIO
		High lid enclosures		**B-0106/R**	
	Hinges (2 per enclosure)	SAG606018	Material: stainless steel	**218-9301**	RICAMBIO
	Entry blanking plugs	For models and codes, visit www.cortemgroup.com		**PLG...**	ACCESSORIO RICAMBIO
	Cable glands and unions			**NAV...** **NEV...**	ACCESSORIO RICAMBIO
	Sealed bushings			**CP...** **TP...**	ACCESSORIO RICAMBIO
	Lid-mounted control and signalling devices	For control and signalling device models and codes, see control and monitoring device chapter		**M-0...** **(Ex de)**	ACCESSORIO RICAMBIO

SA, SAG... series 'Ex eb' aluminium junction boxes

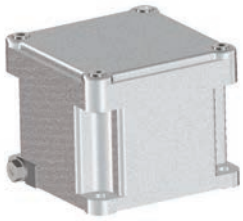

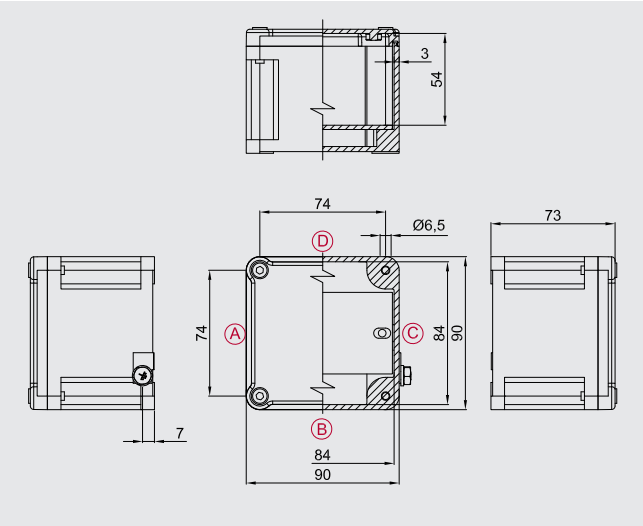

Zone 1,2,21,22.
Degree of protection IP66.
Aluminium alloy body and lid.
Silicone gasket.
Stainless steel bolts and screws.
Polyester coating RAL 7035.
Impact protection IK10.

Ordering details

Standard aluminium enclosure:	**SA090907**
Width/Depth/Height:	**90/90/73mm**

Certification data for enclosures with terminals

Group II Category 2GD

Zone 1- Zone 2 (Gas) Zone 21 - Zone 22 (Dust)

II 2GD Ex eb IIC T.. Gb - Ex tb IIIC T.. Db IP66

II 2GD Ex ia IIC T.. Gb - Ex ia IIIC T.. Db IP66

II 2GD Ex eb ia IIC T.. Gb - Ex tb ia IIIC T.. Db IP66

Ambient temperature: -40°C +55°C (+40°C)

Certification:

CESI 03 ATEX 333	(ATEX)
IEC Ex CES 13.0001	(IECEx)
Russian	(TR CU)
Brazilian	(INMETRO)

Accessories

Internal mounting plate:	**CODE**
2.5mm-thick aluminium:	**B09-229**
2.5mm-thick galvanized steel:	**B09-229AC**
2.5mm-thick stainless steel:	**B09-229IN**
Hinges (two each type):	**B-0105/R**
Breather and drain valve:	**ECD-210S**

Other:
Internal anti-condensation coating
External polyester coatings in different colour
Terminals
Cable glands

Internal mounting plate dimensions

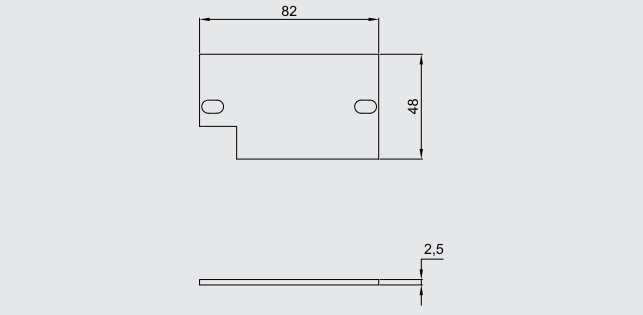

Max. number of terminals

X-SECT.	QTY.
1.5 mm²	1x11
2.5 mm²	1x7
4 mm²	1x6
6 mm²	1x5
10 mm²	-
16 mm²	-
25 mm²	-

Eg. 2x22= 2 rows of 22 terminals (total 44 terminals). The maximum number of standard terminals refers to the mounting of CABUR and/or WEIDMULLER terminals. The data in the table are given as a rough guide only based solely on the size of the enclosures and the space taken up by the terminals.

Number of cable glands

Hole type	A/C	B/D
M16	1	1
M20	1	1
M25	1	1
M32	-	-
M40	-	-
M50	-	-
M63	-	-

As required by the current standard, holes can be drilled by Cortem or by authorized partners who hold a production notification in accordance with ATEX Directive .

Research conducted using Cortem's new NAV and NEV series cable glands.

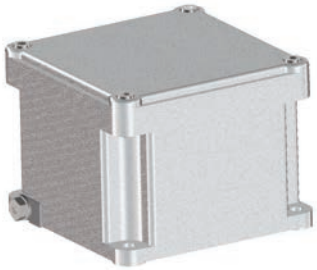

Zone 1,2,21,22.
Degree of protection IP66.
Aluminium alloy body and lid.
Silicone gasket.
Stainless steel bolts and screws.
Polyester coating RAL 7035.
Impact protection IK10.

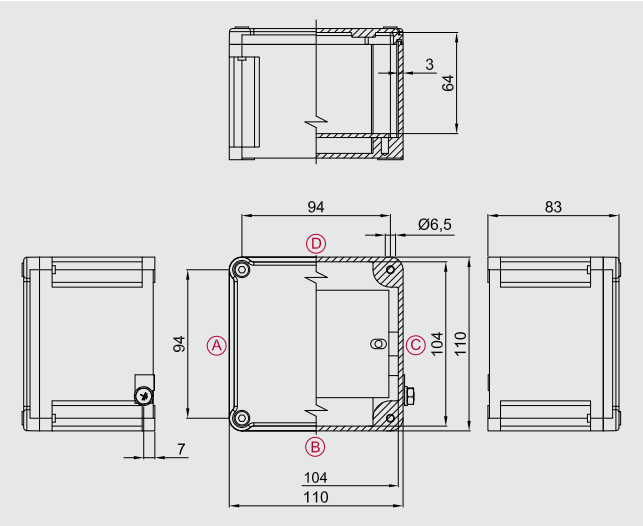

Ordering details

Standard aluminium enclosure:	**SA111108**
Width/Depth/Height:	**110/110/83mm**

Certification data for enclosures with terminals

Group II Category 2GD

Zone 1- Zone 2 (Gas) Zone 21 - Zone 22 (Dust)

II 2GD Ex eb IIC T.. Gb - Ex tb IIIC T.. Db IP66

II 2GD Ex ia IIC T.. Gb - Ex ia IIIC T.. Db IP66

II 2GD Ex eb ia IIC T.. Gb - Ex tb ia IIIC T.. Db IP66

Ambient temperature: -40°C +55°C (+40°C)

Certification:

CESI 03 ATEX 333	(ATEX)
IEC Ex CES 13.0001	(IECEx)
Russian	(TR CU)
Brazilian	(INMETRO)

Accessories

Internal mounting plate:	**CODE**
2.5mm-thick aluminium:	**B11-229**
2.5mm-thick galvanized steel:	**B11-229AC**
2.5mm-thick stainless steel:	**B11-229IN**
Hinges (two each type):	**B-0105/R**
Breather and drain valve:	**ECD-210S**

Other:
Internal anti-condensation coating
External polyester coatings in different colour
Terminals
Cable glands

Internal mounting plate dimensions

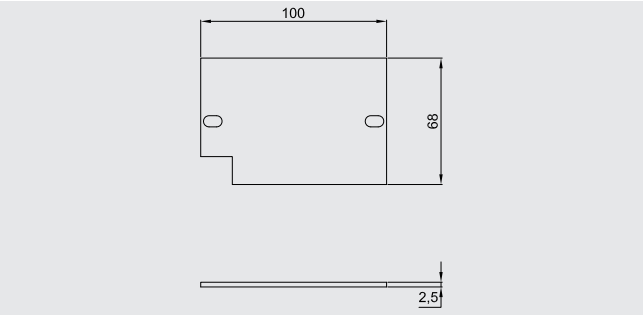

Max. number of terminals

X-SECT.	QTY.
1.5 mm²	1x16
2.5 mm²	1x11
4 mm²	1x9
6 mm²	1x7
10 mm²	1x5
16 mm²	-
25 mm²	-

Eg. 2x22= 2 rows of 22 terminals (total 44 terminals). The maximum number of standard terminals refers to the mounting of CABUR and/or WEIDMULLER terminals. The data in the table are given as a rough guide only based solely on the size of the enclosures and the space taken up by the terminals.

Number of cable glands

Hole type	A/C	B/D
M16	3	3
M20	2	2
M25	1	1
M32	1	1
M40	-	-
M50	-	-
M63	-	-

As required by the current standard, holes can be drilled by Cortem or by authorized partners who hold a production notification in accordance with ATEX Directive .

Research conducted using Cortem's new NAV and NEV series cable glands.

SA, SAG... series 'Ex eb' aluminium junction boxes

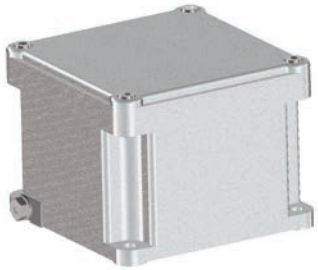

Zone 1,2,21,22.
Degree of protection IP66.
Aluminium alloy body and lid.
Silicone gasket.
Stainless steel bolts and screws.
Polyester coating RAL 7035.
Impact protection IK10.

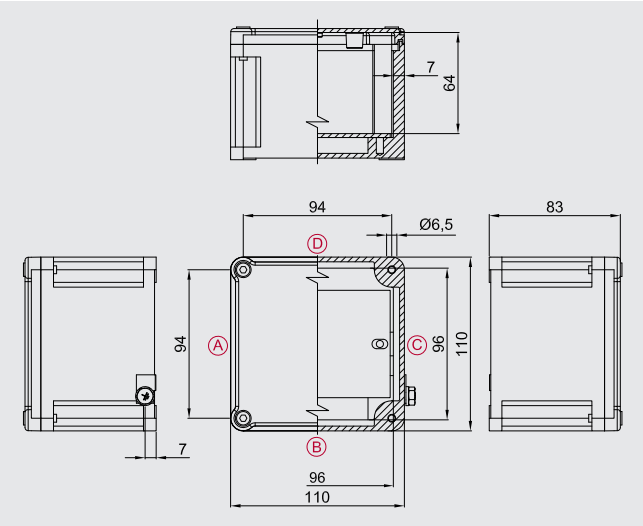

Ordering details

Standard aluminium enclosure:	**SAG111108**
Width/Depth/Height:	**110/110/83mm**

Internal mounting plate dimensions

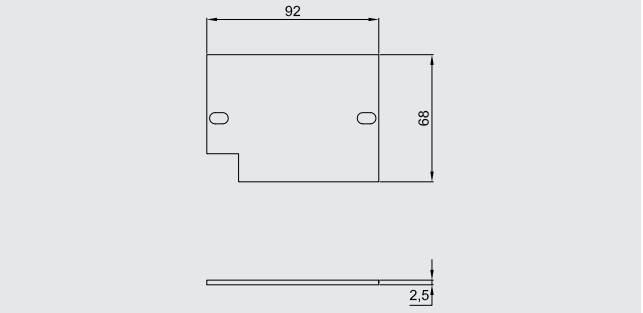

Certification data for enclosures with terminals

Group II Category 2GD

Zone 1- Zone 2 (Gas) Zone 21 - Zone 22 (Dust)

II 2GD Ex eb IIC T.. Gb - Ex tb IIIC T.. Db IP66

II 2GD Ex ia IIC T.. Gb - Ex ia IIIC T.. Db IP66

II 2GD Ex eb ia IIC T.. Gb - Ex tb ia IIIC T.. Db IP66

Ambient temperature: -40°C +55°C (+40°C)

Certification:

CESI 03 ATEX 333	(ATEX)
IEC Ex CES 13.0001	(IECEx)
Russian	(TR CU)
Brazilian	(INMETRO)

Max. number of terminals

X-SECT.	QTY.
1.5 mm²	1x16
2.5 mm²	1x11
4 mm²	1x9
6 mm²	1x7
10 mm²	1x5
16 mm²	-
25 mm²	-

Eg. 2x22= 2 rows of 22 terminals (total 44 terminals). The maximum number of standard terminals refers to the mounting of CABUR and/or WEIDMULLER terminals. The data in the table are given as a rough guide only based solely on the size of the enclosures and the space taken up by the terminals.

Accessories

Internal mounting plate:	**CODE**
2.5mm-thick aluminium:	**B11-229P**
2.5mm-thick galvanized steel:	**B11-229PAC**
2.5mm-thick stainless steel:	**B11-229PIN**
Hinges (two each type):	**B-0105/R**
Breather and drain valve:	**ECD-210S**

Other:
Internal anti-condensation coating
External polyester coatings in different colour
Terminals
Cable glands

Number of cable glands

Hole type	A/C	B/D
M16	3	3
M20	2	2
M25	1	1
M32	1	1
M40	-	-
M50	-	-
M63	-	-

As required by the current standard, holes can be drilled by Cortem or by authorized partners who hold a production notification in accordance with ATEX Directive .

Research conducted using Cortem's new NAV and NEV series cable glands.

Zone 1,2,21,22.
Degree of protection IP66.
Aluminium alloy body and lid.
Silicone gasket.
Stainless steel bolts and screws.
Polyester coating RAL 7035.
Impact protection IK10.

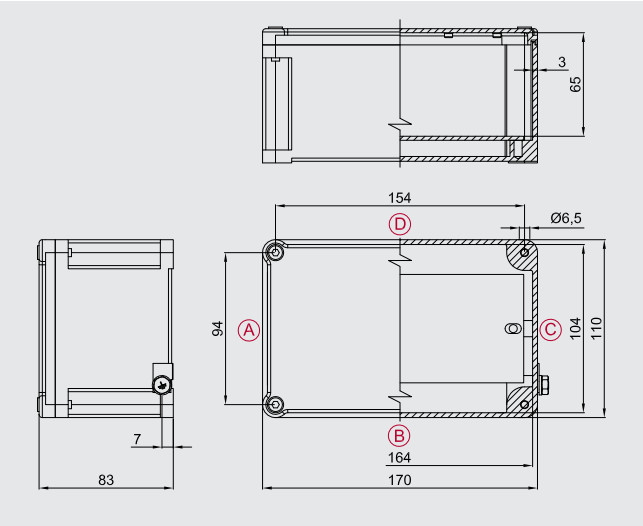

Ordering details

Standard aluminium enclosure:	**SA171108**
Width/Depth/Height:	**170/110/83mm**

Certification data for enclosures with terminals

Group II Category 2GD

Zone 1- Zone 2 (Gas) Zone 21 - Zone 22 (Dust)

II 2GD Ex eb IIC T.. Gb - Ex tb IIIC T.. Db IP66

II 2GD Ex ia IIC T.. Gb - Ex ia IIIC T.. Db IP66

II 2GD Ex eb ia IIC T.. Gb - Ex tb ia IIIC T.. Db IP66

Ambient temperature: -40°C +55°C (+40°C)

Certification:

CESI 03 ATEX 333	(ATEX)
IEC Ex CES 13.0001	(IECEx)
Russian	(TR CU)
Brazilian	(INMETRO)

Accessories

Internal mounting plate:	**CODE**
2.5mm-thick aluminium:	**B17-229**
2.5mm-thick galvanized steel:	**B17-229AC**
2.5mm-thick stainless steel:	**B17-229IN**
Hinges (two each type):	**B-0105/R**
Breather and drain valve:	**ECD-210S**

Other:
Internal anti-condensation coating
External polyester coatings in different colour
Terminals
Cable glands

Internal mounting plate dimensions

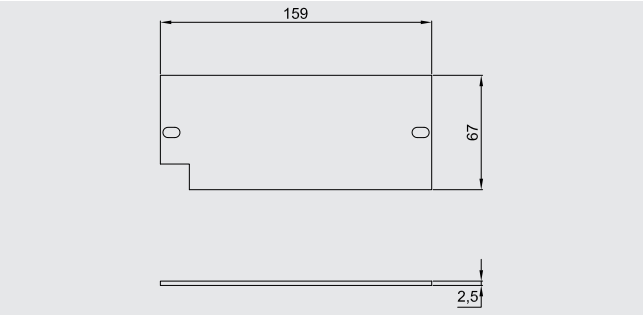

Max. number of terminals

X-SECT.	QTY.
1.5 mm²	1x32
2.5 mm²	1x22
4 mm²	1x19
6 mm²	1x14
10 mm²	1x11
16 mm²	1x9
25 mm²	-

Eg. 2x22= 2 rows of 22 terminals (total 44 terminals). The maximum number of standard terminals refers to the mounting of CABUR and/or WEIDMULLER terminals. The data in the table are given as a rough guide only based solely on the size of the enclosures and the space taken up by the terminals.

Number of cable glands

Hole type	A/C	B/D
M16	3	8
M20	2	5
M25	1	3
M32	1	2
M40	-	-
M50	-	-
M63	-	-

As required by the current standard, holes can be drilled by Cortem or by authorized partners who hold a production notification in accordance with ATEX Directive .

Research conducted using Cortem's new NAV and NEV series cable glands.

SA, SAG... series 'Ex eb' aluminium junction boxes

Zone 1,2,21,22.
Degree of protection IP66.
Aluminium alloy body and lid.
Silicone gasket.
Stainless steel bolts and screws.
Polyester coating RAL 7035.
Impact protection IK10.

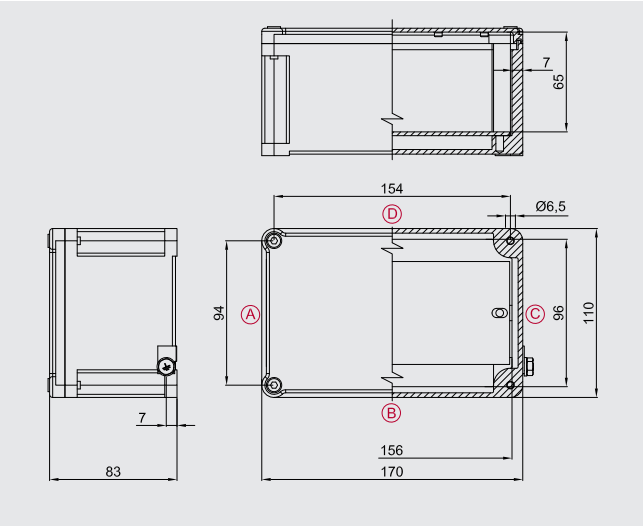

Ordering details

Standard aluminium enclosure:	**SAG171108**
Width/Depth/Height:	**170/110/83mm**

Certification data for enclosures with terminals

Group II Category 2GD

Zone 1- Zone 2 (Gas) Zone 21 - Zone 22 (Dust)

II 2GD Ex eb IIC T.. Gb - Ex tb IIIC T.. Db IP66

II 2GD Ex ia IIC T.. Gb - Ex ia IIIC T.. Db IP66

II 2GD Ex eb ia IIC T.. Gb - Ex tb ia IIIC T.. Db IP66

Ambient temperature: -40°C +55°C (+40°C)

Certification:

CESI 03 ATEX 333	(ATEX)
IEC Ex CES 13.0001	(IECEx)
Russian	(TR CU)
Brazilian	(INMETRO)

Internal mounting plate dimensions

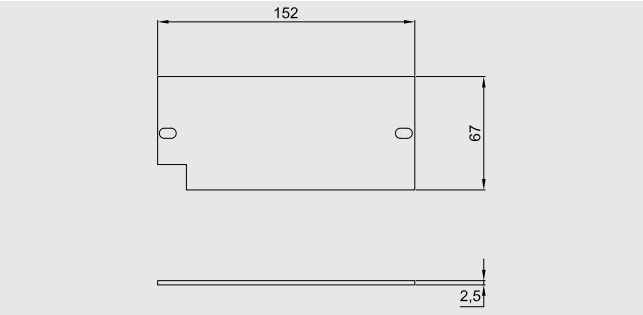

Max. number of terminals

X-SECT.	QTY.
1.5 mm²	1x32
2.5 mm²	1x22
4 mm²	1x19
6 mm²	1x14
10 mm²	1x11
16 mm²	1x9
25 mm²	-

Eg. 2x22= 2 rows of 22 terminals (total 44 terminals). The maximum number of standard terminals refers to the mounting of CABUR and/or WEIDMULLER terminals. The data in the table are given as a rough guide only based solely on the size of the enclosures and the space taken up by the terminals.

Accessories

Internal mounting plate:	**CODE**
2.5mm-thick aluminium:	**B17-229P**
2.5mm-thick galvanized steel:	**B17-229PAC**
2.5mm-thick stainless steel:	**B17-229PIN**
Hinges (two each type):	**B-0105/R**
Breather and drain valve:	**ECD-210S**

Other:
Internal anti-condensation coating
External polyester coatings in different colour
Terminals
Cable glands

Number of cable glands

Hole type	A/C	B/D
M16	3	8
M20	2	5
M25	1	3
M32	1	2
M40	-	-
M50	-	-
M63	-	-

As required by the current standard, holes can be drilled by Cortem or by authorized partners who hold a production notification in accordance with ATEX Directive .

Research conducted using Cortem's new NAV and NEV series cable glands.

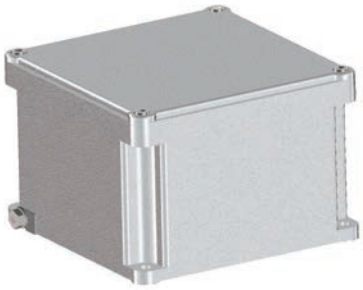

Zone 1,2,21,22.
Degree of protection IP66.
Aluminium alloy body and lid.
Silicone gasket.
Stainless steel bolts and screws.
Polyester coating RAL 7035.
Impact protection IK10.

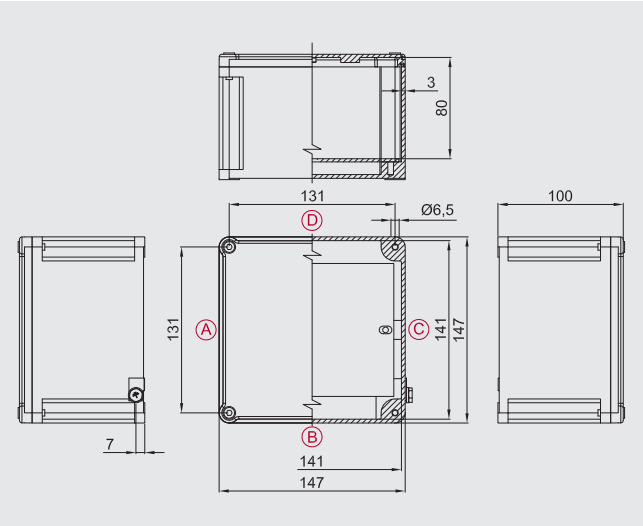

Ordering details

Standard aluminium enclosure:	**SA141410**
Width/Depth/Height:	**147/147/100mm**

Certification data for enclosures with terminals

Group II Category 2GD

Zone 1- Zone 2 (Gas) Zone 21 - Zone 22 (Dust)

II 2GD Ex eb IIC T.. Gb - Ex tb IIIC T.. Db IP66

II 2GD Ex ia IIC T.. Gb - Ex ia IIIC T.. Db IP66

II 2GD Ex eb ia IIC T.. Gb - Ex tb ia IIIC T.. Db IP66

Ambient temperature: -40°C +55°C (+40°C)

Certification:

CESI 03 ATEX 333	(ATEX)
IEC Ex CES 13.0001	(IECEx)
Russian	(TR CU)
Brazilian	(INMETRO)

Accessories

Internal mounting plate:	**CODE**
2.5mm-thick aluminium:	**B14-229**
2.5mm-thick galvanized steel:	**B14-229AC**
2.5mm-thick stainless steel:	**B14-229IN**
Hinges (two each type):	**B-0105/R**
Breather and drain valve:	**ECD-210S**

Other:
Internal anti-condensation coating
External polyester coatings in different colour
Terminals
Cable glands

Internal mounting plate dimensions

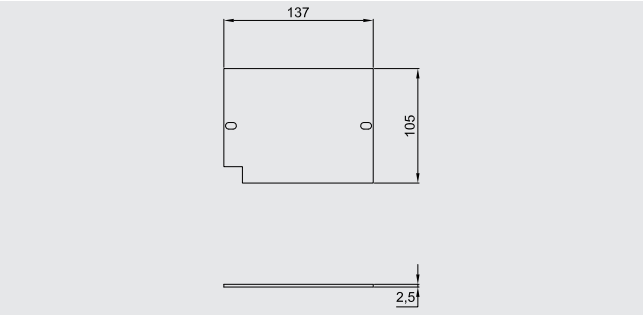

Max. number of terminals

X-SECT.	QTY.
1.5 mm²	1x26
2.5 mm²	1x18
4 mm²	1x15
6 mm²	1x11
10 mm²	1x9
16 mm²	1x7
25 mm²	1x5
70 mm²	-
120 mm²	-

Eg. 2x22= 2 rows of 22 terminals (total 44 terminals). The maximum number of standard terminals refers to the mounting of CABUR and/or WEIDMULLER terminals. The data in the table are given as a rough guide only based solely on the size of the enclosures and the space taken up by the terminals.

Number of cable glands

Hole type	A/C	B/D
M16	6	6
M20	6	6
M25	3	3
M32	2	2
M40	1	1
M50	-	-
M63	-	-

As required by the current standard, holes can be drilled by Cortem or by authorized partners who hold a production notification in accordance with ATEX Directive .

Research conducted using Cortem's new NAV and NEV series cable glands.

SA, SAG... series 'Ex eb' aluminium junction boxes

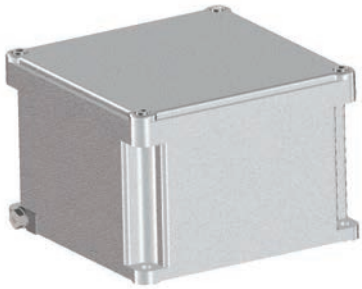

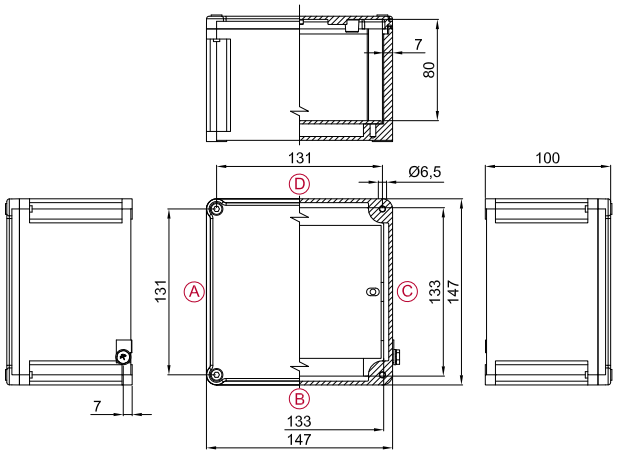

Zone 1,2,21,22.
Degree of protection IP66.
Aluminium alloy body and lid.
Silicone gasket.
Stainless steel bolts and screws.
Polyester coating RAL 7035.
Impact protection IK10.

Ordering details

Standard aluminium enclosure:	**SAG141410**
Width/Depth/Height:	**147/147/100mm**

Certification data for enclosures with terminals

Group II Category 2GD

Zone 1- Zone 2 (Gas) Zone 21 - Zone 22 (Dust)

II 2GD Ex eb IIC T.. Gb - Ex tb IIIC T.. Db IP66

II 2GD Ex ia IIC T.. Gb - Ex ia IIIC T.. Db IP66

II 2GD Ex eb ia IIC T.. Gb - Ex tb ia IIIC T.. Db IP66

Ambient temperature: -40°C +55°C (+40°C)

Certification:

CESI 03 ATEX 333	(ATEX)
IEC Ex CES 13.0001	(IECEx)
Russian	(TR CU)
Brazilian	(INMETRO)

Accessories

Internal mounting plate:	**CODE**
2.5mm-thick aluminium:	**B14-229P**
2.5mm-thick galvanized steel:	**B14-229PAC**
2.5mm-thick stainless steel:	**B14-229PIN**
Hinges (two each type):	**B-0105/R**
Breather and drain valve:	**ECD-210S**

Other:
Internal anti-condensation coating
External polyester coatings in different colour
Terminals
Cable glands

Internal mounting plate dimensions

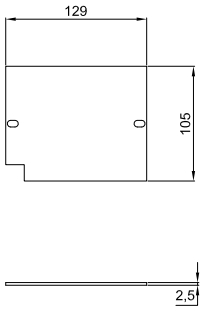

Max. number of terminals

X-SECT.	QTY.
1.5 mm²	1x26
2.5 mm²	1x18
4 mm²	1x15
6 mm²	1x11
10 mm²	1x9
16 mm²	1x7
25 mm²	1x5
70 mm²	-
120 mm²	-

Eg. 2x22= 2 rows of 22 terminals (total 44 terminals). The maximum number of standard terminals refers to the mounting of CABUR and/or WEIDMULLER terminals. The data in the table are given as a rough guide only based solely on the size of the enclosures and the space taken up by the terminals.

Number of cable glands

Hole type	A/C	B/D
M16	6	6
M20	6	6
M25	3	3
M32	2	2
M40	1	1
M50	-	-
M63	-	-

As required by the current standard, holes can be drilled by Cortem or by authorized partners who hold a production notification in accordance with ATEX Directive .

Research conducted using Cortem's new NAV and NEV series cable glands.

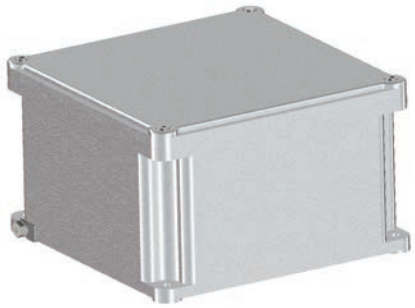

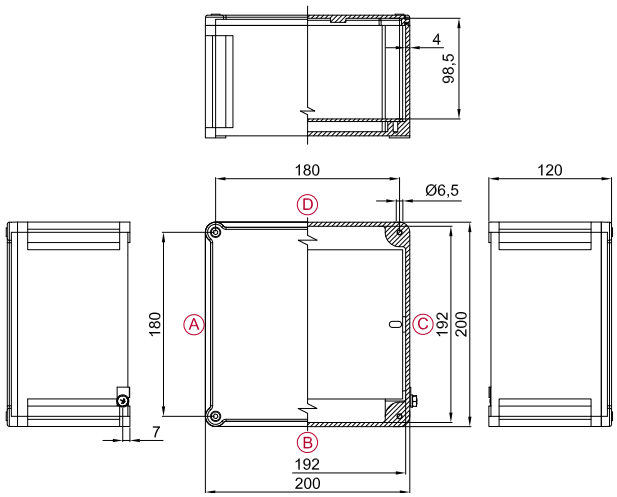

Zone 1,2,21,22.
Degree of protection IP66.
Aluminium alloy body and lid.
Silicone gasket.
Stainless steel bolts and screws.
Polyester coating RAL 7035.
Impact protection IK10.

Ordering details

Standard aluminium enclosure:	**SA202012**
Width/Depth/Height:	**200/200/120mm**

Certification data for enclosures with terminals

Group II Category 2GD

Zone 1- Zone 2 (Gas) Zone 21 - Zone 22 (Dust)

II 2GD Ex eb IIC T.. Gb - Ex tb IIIC T.. Db IP66

II 2GD Ex ia IIC T.. Gb - Ex ia IIIC T.. Db IP66

II 2GD Ex eb ia IIC T.. Gb - Ex tb ia IIIC T.. Db IP66

Ambient temperature: -40°C +55°C (+40°C)

Certification:

CESI 03 ATEX 333	(ATEX)
IEC Ex CES 13.0001	(IECEx)
Russian	(TR CU)
Brazilian	(INMETRO)

Accessories

Internal mounting plate:	**CODE**
2.5mm-thick aluminium:	**B20-229**
2.5mm-thick galvanized steel:	**B20-229AC**
2.5mm-thick stainless steel:	**B20-229IN**
Hinges (two each type):	**B-0105/R**
Breather and drain valve:	**ECD-210S**

Other:
Internal anti-condensation coating
External polyester coatings in different colour
Terminals
Cable glands

Internal mounting plate dimensions

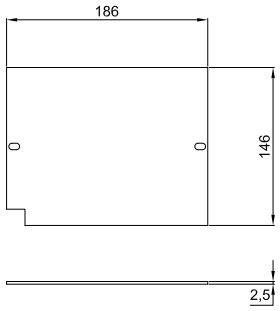

Max. number of terminals

X-SECT.	QTY.
1.5 mm²	2x40
2.5 mm²	2x28
4 mm²	2x23
6 mm²	1x17
10 mm²	1x13
16 mm²	1x11
25 mm²	1x8
70 mm²	-
120 mm²	-

Eg. 2x22= 2 rows of 22 terminals (total 44 terminals). The maximum number of standard terminals refers to the mounting of CABUR and/or WEIDMULLER terminals. The data in the table are given as a rough guide only based solely on the size of the enclosures and the space taken up by the terminals.

Number of cable glands

Hole type	A/C	B/D
M16	8	8
M20	7	7
M25	6	6
M32	3	3
M40	2	2
M50	1	1
M63	-	-

As required by the current standard, holes can be drilled by Cortem or by authorized partners who hold a production notification in accordance with ATEX Directive .

Research conducted using Cortem's new NAV and NEV series cable glands.

SA, SAG... series 'Ex eb' aluminium junction boxes

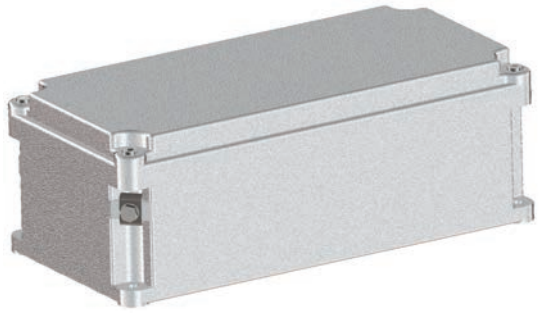

Zone 1,2,21,22.
Degree of protection IP66.
Aluminium alloy body and lid.
Silicone gasket.
Stainless steel bolts and screws.
Polyester coating RAL 7035.
Impact protection IK10.

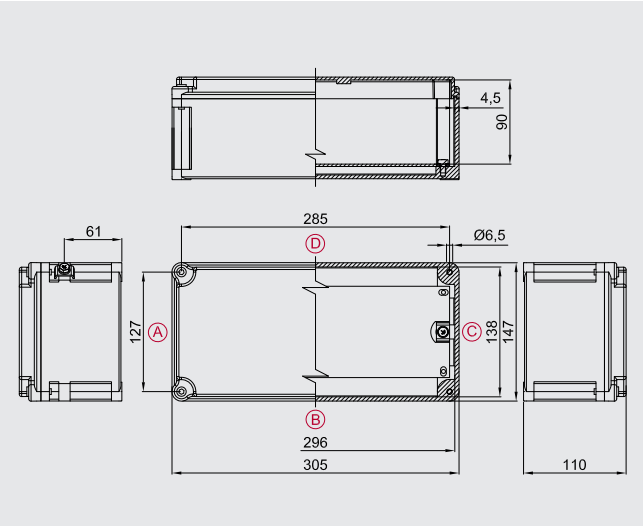

Ordering details

Standard aluminium enclosure:	**SA301410**
Width/Depth/Height:	**305/147/110mm**

Certification data for enclosures with terminals

Group II Category 2GD

Zone 1- Zone 2 (Gas) Zone 21 - Zone 22 (Dust)

II 2GD Ex eb IIC T.. Gb - Ex tb IIIC T.. Db IP66

II 2GD Ex ia IIC T.. Gb - Ex ia IIIC T.. Db IP66

II 2GD Ex eb ia IIC T.. Gb - Ex tb ia IIIC T.. Db IP66

Ambient temperature: -40°C +55°C (+40°C)

Certification:

CESI 03 ATEX 333	(ATEX)
IEC Ex CES 13.0001	(IECEx)
Russian	(TR CU)
Brazilian	(INMETRO)

Internal mounting plate dimensions

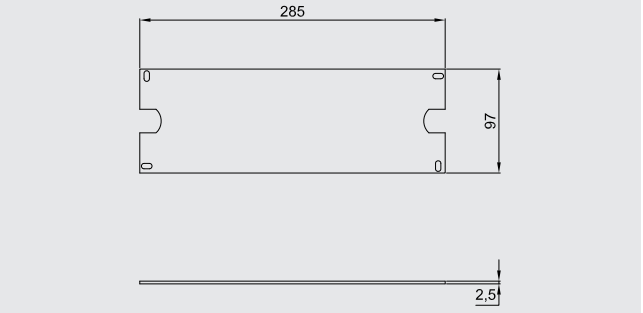

Accessories

Internal mounting plate:	**CODE**
2.5mm-thick aluminium:	**B31-229**
2.5mm-thick galvanized steel:	**B31-229AC**
2.5mm-thick stainless steel:	**B31-229IN**
Hinges (two each type):	**B-0106/R**
Breather and drain valve:	**ECD-210S**

Other:
Internal anti-condensation coating
External polyester coatings in different colour
Terminals
Cable glands

Max. number of terminals

X-SECT.	QTY.
2.5 mm²	1x48
4 mm²	1x40
6 mm²	1x30
10 mm²	1x24
16 mm²	1x20
25 mm²	1x14
70 mm²	-
120 mm²	-
185 mm²	-

Eg. 2x22= 2 rows of 22 terminals (total 44 terminals). The maximum number of standard terminals refers to the mounting of CABUR and/or WEIDMULLER terminals. The data in the table are given as a rough guide only based solely on the size of the enclosures and the space taken up by the terminals.

Number of cable glands

Hole type	A/C	B/D
M16	6	14
M20	4	12
M25	3	9
M32	1	5
M40	1	4
M50	1	3
M63	-	-

As required by the current standard, holes can be drilled by Cortem or by authorized partners who hold a production notification in accordance with ATEX Directive .

Research conducted using Cortem's new NAV and NEV series cable glands.

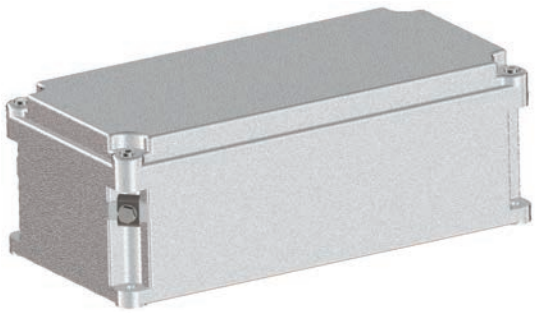

Zone 1,2,21,22.
Degree of protection IP66.
Aluminium alloy body and lid.
Silicone gasket.
Stainless steel bolts and screws.
Polyester coating RAL 7035.
Impact protection IK10.

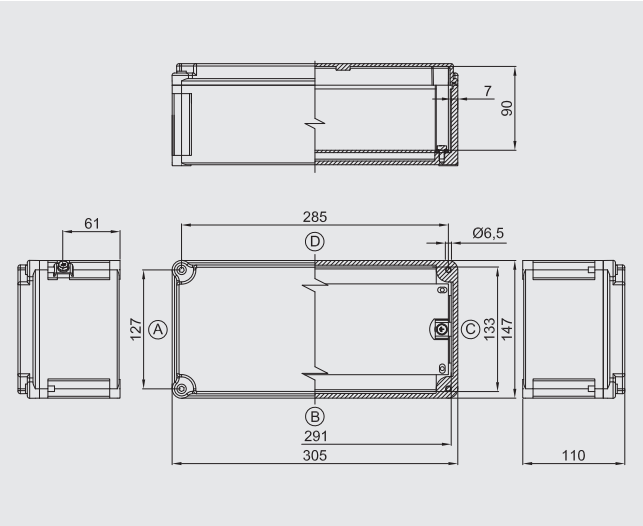

Ordering details

Standard aluminium enclosure:	**SAG301410**
Width/Depth/Height:	**305/147/110mm**

Certification data for enclosures with terminals

Group II Category 2GD

Zone 1- Zone 2 (Gas) Zone 21 - Zone 22 (Dust)

II 2GD Ex eb IIC T.. Gb - Ex tb IIIC T.. Db IP66

II 2GD Ex ia IIC T.. Gb - Ex ia IIIC T.. Db IP66

II 2GD Ex eb ia IIC T.. Gb - Ex tb ia IIIC T.. Db IP66

Ambient temperature: -40°C +55°C (+40°C)

Certification:

CESI 03 ATEX 333	(ATEX)
IEC Ex CES 13.0001	(IECEx)
Russian	(TR CU)
Brazilian	(INMETRO)

Accessories

Internal mounting plate:	**CODE**
2.5mm-thick aluminium:	**B31-229**
2.5mm-thick galvanized steel:	**B31-229AC**
2.5mm-thick stainless steel:	**B31-229IN**
Hinges (two each type):	**B-0106/R**
Breather and drain valve:	**ECD-210S**

Other:
Internal anti-condensation coating
External polyester coatings in different colour
Terminals
Cable glands

Internal mounting plate dimensions

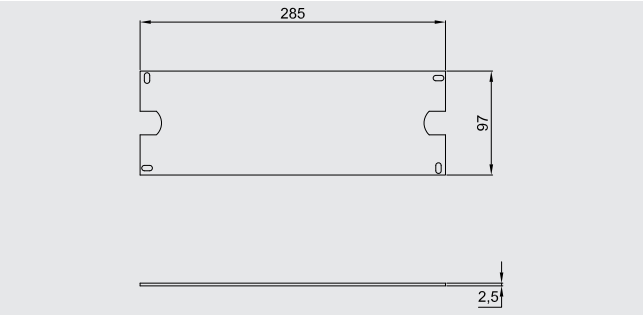

Max. number of terminals

X-SECT.	QTY.
2.5 mm²	1x48
4 mm²	1x40
6 mm²	1x30
10 mm²	1x24
16 mm²	1x20
25 mm²	1x14
70 mm²	-
120 mm²	-
185 mm²	-

Eg. 2x22= 2 rows of 22 terminals (total 44 terminals). The maximum number of standard terminals refers to the mounting of CABUR and/or WEIDMULLER terminals. The data in the table are given as a rough guide only based solely on the size of the enclosures and the space taken up by the terminals.

Number of cable glands

Hole type	A/C	B/D
M16	6	14
M20	4	12
M25	3	9
M32	1	5
M40	1	4
M50	1	3
M63	-	-

As required by the current standard, holes can be drilled by Cortem or by authorized partners who hold a production notification in accordance with ATEX Directive .

Research conducted using Cortem's new NAV and NEV series cable glands.

SA, SAG... series 'Ex eb' aluminium junction boxes

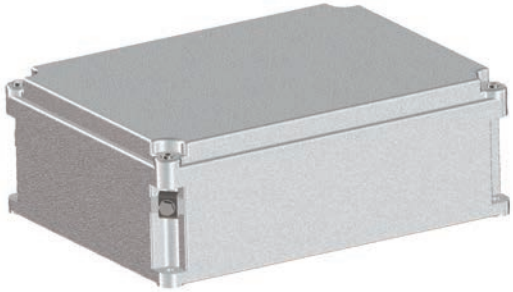

Zone 1,2,21,22.
Degree of protection IP66.
Aluminium alloy body and lid.
Silicone gasket.
Stainless steel bolts and screws.
Polyester coating RAL 7035.
Impact protection IK10.

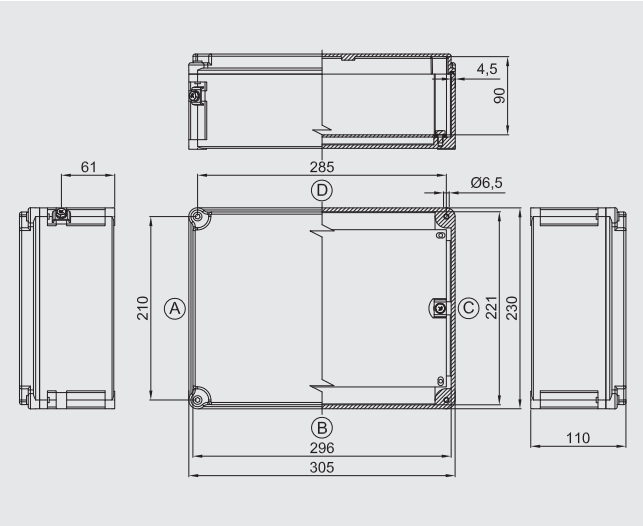

Ordering details

Standard aluminium enclosure:	**SA302310**
Width/Depth/Height:	**305/230/110mm**

Certification data for enclosures with terminals

Group II Category 2GD

Zone 1- Zone 2 (Gas) Zone 21 - Zone 22 (Dust)

II 2GD Ex eb IIC T.. Gb - Ex tb IIIC T.. Db IP66

II 2GD Ex ia IIC T.. Gb - Ex ia IIIC T.. Db IP66

II 2GD Ex eb ia IIC T.. Gb - Ex tb ia IIIC T.. Db IP66

Ambient temperature: -40°C +55°C (+40°C)

Certification:

CESI 03 ATEX 333	(ATEX)
IEC Ex CES 13.0001	(IECEx)
Russian	(TR CU)
Brazilian	(INMETRO)

Internal mounting plate dimensions

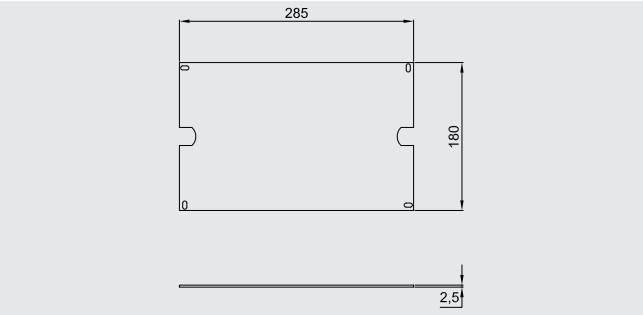

Accessories

Internal mounting plate:	**CODE**
2.5mm-thick aluminium:	**B32-229**
2.5mm-thick galvanized steel:	**B32-229AC**
2.5mm-thick stainless steel:	**B32-229IN**
Hinges (two each type):	**B-0106/R**
Breather and drain valve:	**ECD-210S**

Other:
Internal anti-condensation coating
External polyester coatings in different colour
Terminals
Cable glands

Max. number of terminals

X-SECT.	QTY.
2.5 mm²	2x48
4 mm²	2x40
6 mm²	2x30
10 mm²	2x24
16 mm²	2x20
25 mm²	15
70 mm²	-
120 mm²	-
185 mm²	-

Eg. 2x22= 2 rows of 22 terminals (total 44 terminals). The maximum number of standard terminals refers to the mounting of CABUR and/or WEIDMULLER terminals. The data in the table are given as a rough guide only based solely on the size of the enclosures and the space taken up by the terminals.

Number of cable glands

Hole type	A/C	B/D
M16	10	14
M20	10	12
M25	7	9
M32	3	5
M40	3	4
M50	2	3
M63	-	-

As required by the current standard, holes can be drilled by Cortem or by authorized partners who hold a production notification in accordance with ATEX Directive .

Research conducted using Cortem's new NAV and NEV series cable glands.

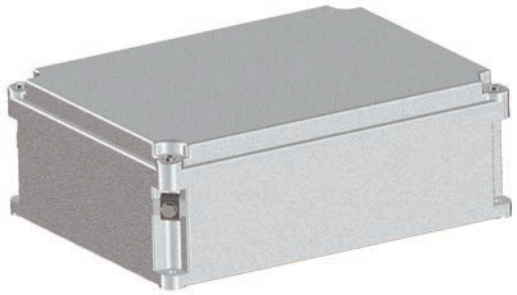

Zone 1,2,21,22.
Degree of protection IP66.
Aluminium alloy body and lid.
Silicone gasket.
Stainless steel bolts and screws.
Polyester coating RAL 7035.
Impact protection IK10.

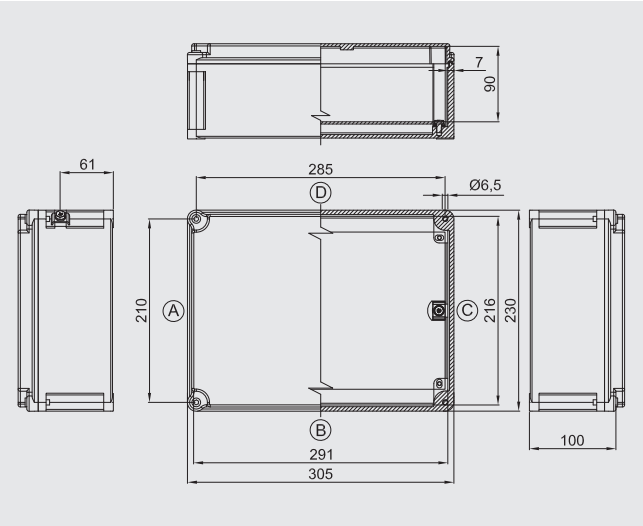

Ordering details

Standard aluminium enclosure:	**SAG302310**
Width/Depth/Height:	**305/230/110mm**

Certification data for enclosures with terminals

Group II Category 2GD

Zone 1- Zone 2 (Gas) Zone 21 - Zone 22 (Dust)

II 2GD Ex eb IIC T.. Gb - Ex tb IIIC T.. Db IP66

II 2GD Ex ia IIC T.. Gb - Ex ia IIIC T.. Db IP66

II 2GD Ex eb ia IIC T.. Gb - Ex tb ia IIIC T.. Db IP66

Ambient temperature: -40°C +55°C (+40°C)

Certification:

CESI 03 ATEX 333	(ATEX)
IEC Ex CES 13.0001	(IECEx)
Russian	(TR CU)
Brazilian	(INMETRO)

Accessories

Internal mounting plate:	**CODE**
2.5mm-thick aluminium:	**B32-229**
2.5mm-thick galvanized steel:	**B32-229AC**
2.5mm-thick stainless steel:	**B32-229IN**
Hinges (two each type):	**B-0106/R**
Breather and drain valve:	**ECD-210S**

Other:
Internal anti-condensation coating
External polyester coatings in different colour
Terminals
Cable glands

Internal mounting plate dimensions

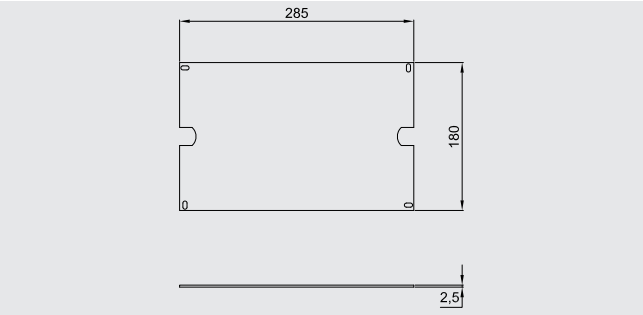

Max. number of terminals

X-SECT.	QTY.
2.5 mm²	2x48
4 mm²	2x40
6 mm²	2x30
10 mm²	2x24
16 mm²	2x20
25 mm²	15
70 mm²	-
120 mm²	-
185 mm²	-

Eg. 2x22= 2 rows of 22 terminals (total 44 terminals). The maximum number of standard terminals refers to the mounting of CABUR and/or WEIDMULLER terminals. The data in the table are given as a rough guide only based solely on the size of the enclosures and the space taken up by the terminals.

Number of cable glands

Hole type	A/C	B/D
M16	10	14
M20	10	12
M25	7	9
M32	3	5
M40	3	4
M50	2	3
M63	-	-

As required by the current standard, holes can be drilled by Cortem or by authorized partners who hold a production notification in accordance with ATEX Directive .

Research conducted using Cortem's new NAV and NEV series cable glands.

SA, SAG... series 'Ex eb' aluminium junction boxes

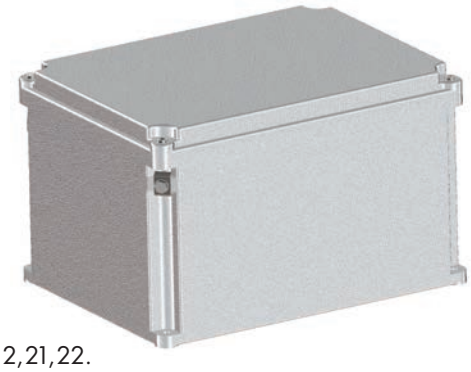

Zone 1,2,21,22.
Degree of protection IP66.
Aluminium alloy body and lid.
Silicone gasket.
Stainless steel bolts and screws.
Polyester coating RAL 7035.
Impact protection IK10.

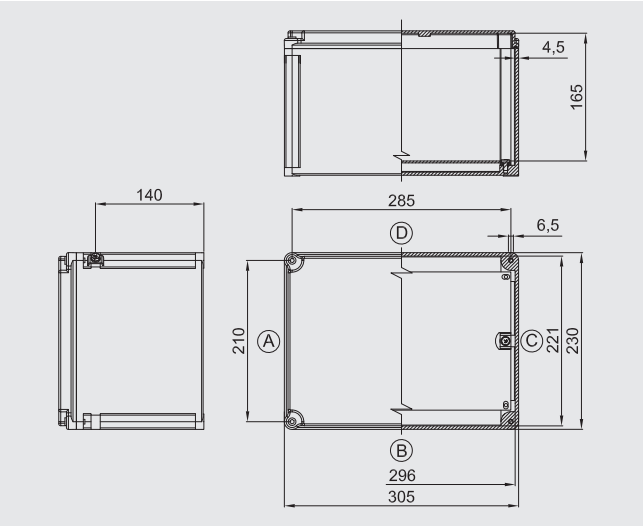

Ordering details

Standard aluminium enclosure:	**SA302318**
Width/Depth/Height:	**305/230/190mm**

Certification data for enclosures with terminals

Group II Category 2GD

Zone 1- Zone 2 (Gas) Zone 21 - Zone 22 (Dust)

II 2GD Ex eb IIC T.. Gb - Ex tb IIIC T.. Db IP66

II 2GD Ex ia IIC T.. Gb - Ex ia IIIC T.. Db IP66

II 2GD Ex eb ia IIC T.. Gb - Ex tb ia IIIC T.. Db IP66

Ambient temperature: -40°C +55°C (+40°C)

Certification:

CESI 03 ATEX 333	(ATEX)
IEC Ex CES 13.0001	(IECEx)
Russian	(TR CU)
Brazilian	(INMETRO)

Accessories

Internal mounting plate:	**CODE**
2.5mm-thick aluminium:	**B32-229**
2.5mm-thick galvanized steel:	**B32-229AC**
2.5mm-thick stainless steel:	**B32-229IN**
Hinges (two each type):	**B-0106/R**
Breather and drain valve:	**ECD-210S**

Other:
Internal anti-condensation coating
External polyester coatings in different colour
Terminals
Cable glands

Internal mounting plate dimensions

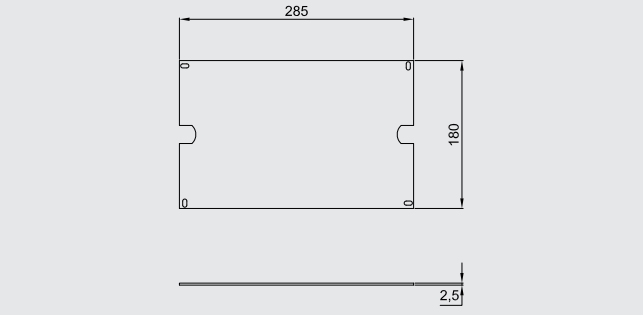

Max. number of terminals

X-SECT.	QTY.
2.5 mm²	2x48
4 mm²	2x40
6 mm²	2x30
10 mm²	2x24
16 mm²	2x20
25 mm²	15
50 mm²	13
70 mm²	-
185 mm²	-

Eg. 2x22= 2 rows of 22 terminals (total 44 terminals). The maximum number of standard terminals refers to the mounting of CABUR and/or WEIDMULLER terminals. The data in the table are given as a rough guide only based solely on the size of the enclosures and the space taken up by the terminals.

Number of cable glands

Hole type	A/C	B/D
M20	18	24
M25	12	18
M32	9	14
M40	6	8
M50	4	6
M63	2	3

As required by the current standard, holes can be drilled by Cortem or by authorized partners who hold a production notification in accordance with ATEX Directive .

Research conducted using Cortem's new NAV and NEV series cable glands.

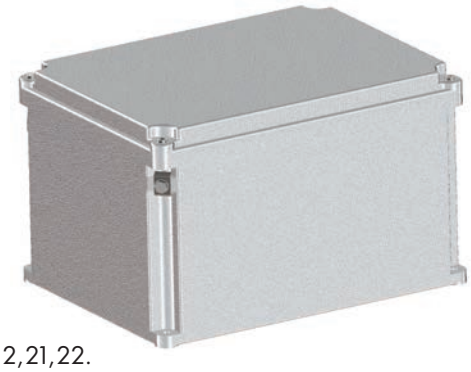

Zone 1,2,21,22.
Degree of protection IP66.
Aluminium alloy body and lid.
Silicone gasket.
Stainless steel bolts and screws.
Polyester coating RAL 7035.
Impact protection IK10.

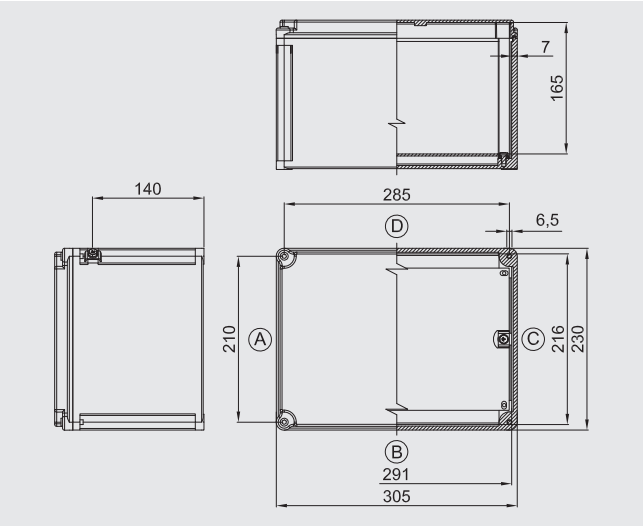

Ordering details

Standard aluminium enclosure:	**SAG302318**
Width/Depth/Height:	**305/230/190mm**

Certification data for enclosures with terminals

Group II Category 2GD

Zone 1- Zone 2 (Gas) Zone 21 - Zone 22 (Dust)

II 2GD Ex eb IIC T.. Gb - Ex tb IIIC T.. Db IP66

II 2GD Ex ia IIC T.. Gb - Ex ia IIIC T.. Db IP66

II 2GD Ex eb ia IIC T.. Gb - Ex tb ia IIIC T.. Db IP66

Ambient temperature: -40°C +55°C (+40°C)

Certification:

CESI 03 ATEX 333	(ATEX)
IEC Ex CES 13.0001	(IECEx)
Russian	(TR CU)
Brazilian	(INMETRO)

Accessories

Internal mounting plate:	**CODE**
2.5mm-thick aluminium:	**B32-229**
2.5mm-thick galvanized steel:	**B32-229AC**
2.5mm-thick stainless steel:	**B32-229IN**
Hinges (two each type):	**B-0106/R**
Breather and drain valve:	**ECD-210S**

Other:
Internal anti-condensation coating
External polyester coatings in different colour
Terminals
Cable glands

Internal mounting plate dimensions

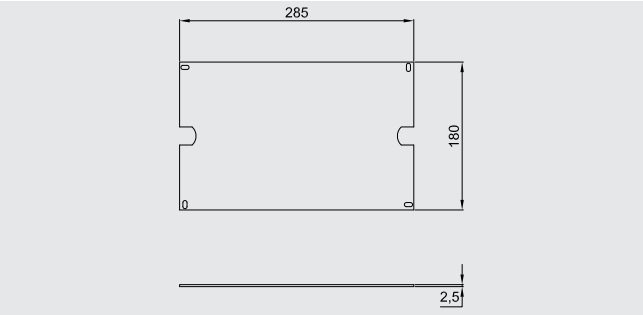

Max. number of terminals

X-SECT.	QTY.
2.5 mm²	2x48
4 mm²	2x40
6 mm²	2x30
10 mm²	2x24
16 mm²	2x20
25 mm²	15
50 mm²	13
70 mm²	-
185 mm²	-

Eg. 2x22= 2 rows of 22 terminals (total 44 terminals). The maximum number of standard terminals refers to the mounting of CABUR and/or WEIDMULLER terminals. The data in the table are given as a rough guide only based solely on the size of the enclosures and the space taken up by the terminals.

Number of cable glands

Hole type	A/C	B/D
M20	18	24
M25	12	18
M32	9	14
M40	6	8
M50	4	6
M63	2	3

As required by the current standard, holes can be drilled by Cortem or by authorized partners who hold a production notification in accordance with ATEX Directive .

Research conducted using Cortem's new NAV and NEV series cable glands.

SA, SAG... series 'Ex eb' aluminium junction boxes

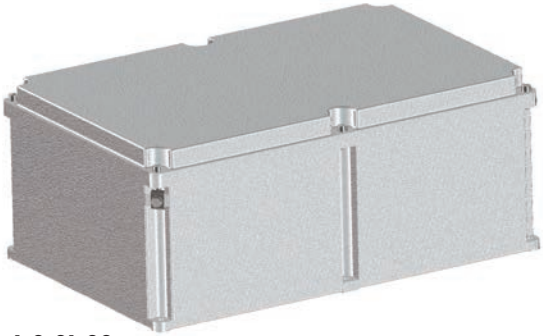

Zone 1,2,21,22.
Degree of protection IP66.
Aluminium alloy body and lid.
Silicone gasket.
Stainless steel bolts and screws.
Polyester coating RAL 7035.
Impact protection IK10.

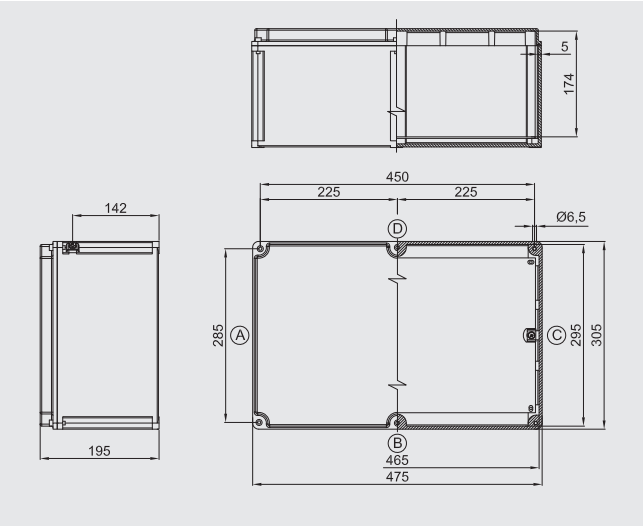

Ordering details

Standard aluminium enclosure:	**SA473018**
Width/Depth/Height:	**475/305/195mm**

Certification data for enclosures with terminals

Group II Category 2GD

Zone 1- Zone 2 (Gas) Zone 21 - Zone 22 (Dust)

II 2GD Ex eb IIC T.. Gb - Ex tb IIIC T.. Db IP66

II 2GD Ex ia IIC T.. Gb - Ex ia IIIC T.. Db IP66

II 2GD Ex eb ia IIC T.. Gb - Ex tb ia IIIC T.. Db IP66

Ambient temperature: -40°C +55°C (+40°C)

Certification:

CESI 03 ATEX 333	(ATEX)
IEC Ex CES 13.0001	(IECEx)
Russian	(TR CU)
Brazilian	(INMETRO)

Accessories

Internal mounting plate:	**CODE**
2.5mm-thick aluminium:	**B43-229**
2.5mm-thick galvanized steel:	**B43-229AC**
2.5mm-thick stainless steel:	**B43-229IN**
Hinges (two each type):	**B-0106/R**
Breather and drain valve:	**ECD-210S**

Other:
Internal anti-condensation coating
External polyester coatings in different colour
Terminals
Cable glands

Internal mounting plate dimensions

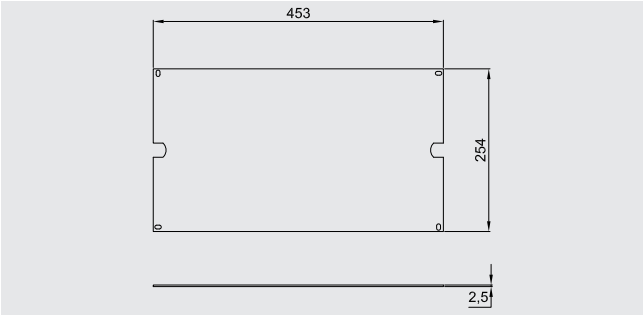

Max. number of terminals

X-SECT.	QTY.
2.5 mm²	2x81
4 mm²	2x68
6 mm²	2x51
10 mm²	2x40
16 mm²	2x33
25 mm²	2x25
70 mm²	2x19
120 mm²	12
185 mm²	11

Eg. 2x22= 2 rows of 22 terminals (total 44 terminals). The maximum number of standard terminals refers to the mounting of CABUR and/or WEIDMULLER terminals. The data in the table are given as a rough guide only based solely on the size of the enclosures and the space taken up by the terminals.

Number of cable glands

Hole type	A/C	B/D
M20	24	36
M25	18	24
M32	14	18
M40	8	12
M50	8	12
M63	3	4

As required by the current standard, holes can be drilled by Cortem or by authorized partners who hold a production notification in accordance with ATEX Directive .

Research conducted using Cortem's new NAV and NEV series cable glands.

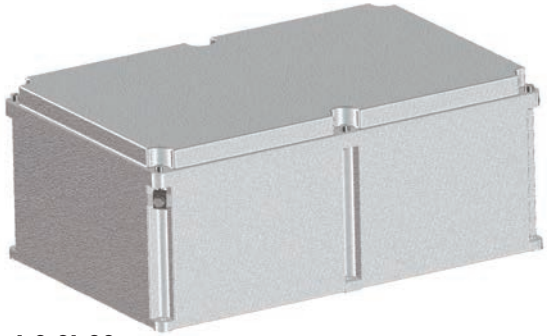

Zone 1,2,21,22.
Degree of protection IP66.
Aluminium alloy body and lid.
Silicone gasket.
Stainless steel bolts and screws.
Polyester coating RAL 7035.
Impact protection IK10.

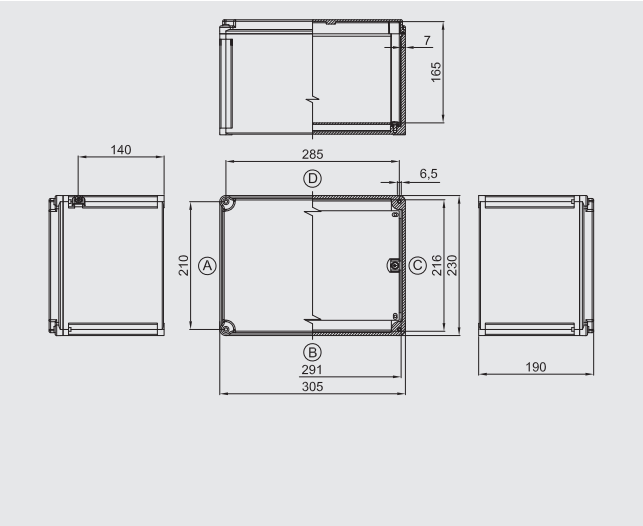

Ordering details

Standard aluminium enclosure:	**SAG473018**
Width/Depth/Height:	**475/305/195mm**

Certification data for enclosures with terminals

Group II Category 2GD

Zone 1- Zone 2 (Gas) Zone 21 - Zone 22 (Dust)

II 2GD Ex eb IIC T.. Gb - Ex tb IIIC T.. Db IP66

II 2GD Ex ia IIC T.. Gb - Ex ia IIIC T.. Db IP66

II 2GD Ex eb ia IIC T.. Gb - Ex tb ia IIIC T.. Db IP66

Ambient temperature: -40°C +55°C (+40°C)

Certification:

CESI 03 ATEX 333	(ATEX)
IEC Ex CES 13.0001	(IECEx)
Russian	(TR CU)
Brazilian	(INMETRO)

Accessories

Internal mounting plate:	**CODE**
2.5mm-thick aluminium:	**B43-229**
2.5mm-thick galvanized steel:	**B43-229AC**
2.5mm-thick stainless steel:	**B43-229IN**
Hinges (two each type):	**B-0106/R**
Breather and drain valve:	**ECD-210S**

Other:
Internal anti-condensation coating
External polyester coatings in different colour
Terminals
Cable glands

Internal mounting plate dimensions

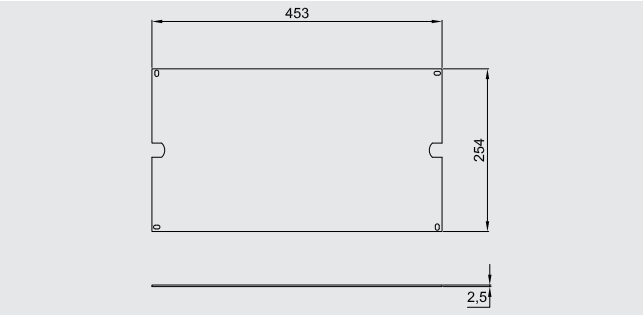

Max. number of terminals

X-SECT.	QTY.
2.5 mm²	2x81
4 mm²	2x68
6 mm²	2x51
10 mm²	2x40
16 mm²	2x33
25 mm²	2x25
70 mm²	2x19
120 mm²	12
185 mm²	11

Eg. 2x22= 2 rows of 22 terminals (total 44 terminals). The maximum number of standard terminals refers to the mounting of CABUR and/or WEIDMULLER terminals. The data in the table are given as a rough guide only based solely on the size of the enclosures and the space taken up by the terminals.

Number of cable glands

Hole type	A/C	B/D
M20	24	36
M25	18	24
M32	14	18
M40	8	12
M50	6	12
M63	3	4

As required by the current standard, holes can be drilled by Cortem or by authorized partners who hold a production notification in accordance with ATEX Directive .

Research conducted using Cortem's new NAV and NEV series cable glands.

SA, SAG... series 'Ex eb' aluminium junction boxes

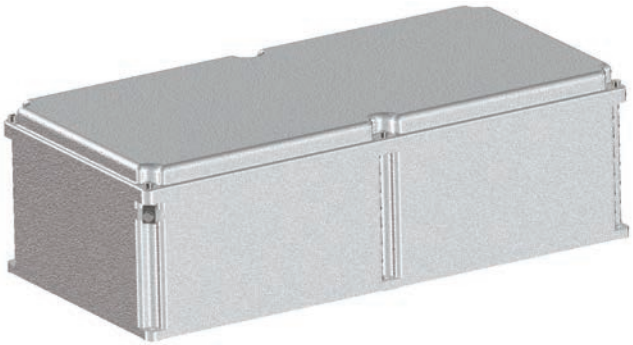

Zone 1,2,21,22.
Degree of protection IP66.
Aluminium alloy body and lid.
Silicone gasket.
Stainless steel bolts and screws.
Polyester coating RAL 7035.
Impact protection IK10.

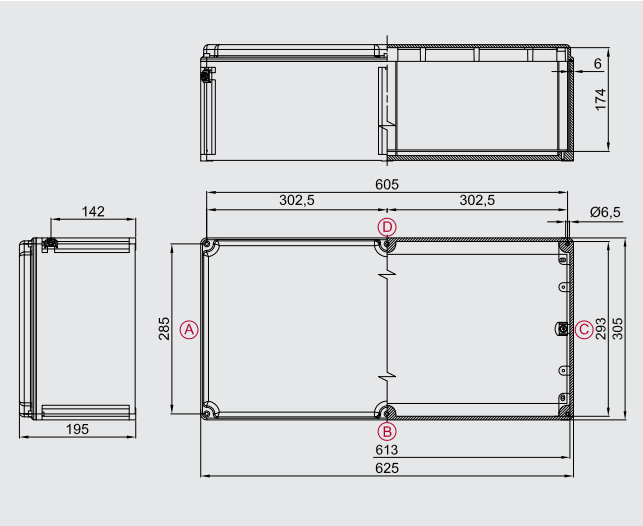

Ordering details

Standard aluminium enclosure:	**SAG623018**
Width/Depth/Height:	**625/305/195mm**

Certification data for enclosures with terminals

Group II Category 2GD

Zone 1- Zone 2 (Gas) Zone 21 - Zone 22 (Dust)

II 2GD Ex eb IIC T.. Gb - Ex tb IIIC T.. Db IP66

II 2GD Ex ia IIC T.. Gb - Ex ia IIIC T.. Db IP66

II 2GD Ex eb ia IIC T.. Gb - Ex tb ia IIIC T.. Db IP66

Ambient temperature: -40°C +55°C (+40°C)

Certification:

CESI 03 ATEX 333	(ATEX)
IEC Ex CES 13.0001	(IECEx)
Russian	(TR CU)
Brazilian	(INMETRO)

Accessories

Internal mounting plate:	**CODE**
2.5mm-thick aluminium:	**B63-229**
2.5mm-thick galvanized steel:	**B63-229AC**
2.5mm-thick stainless steel:	**B63-229IN**
Hinges (two each type):	**B-0106/R**
Breather and drain valve:	**ECD-210S**

Other:
Internal anti-condensation coating
External polyester coatings in different colour
Terminals
Cable glands

Internal mounting plate dimensions

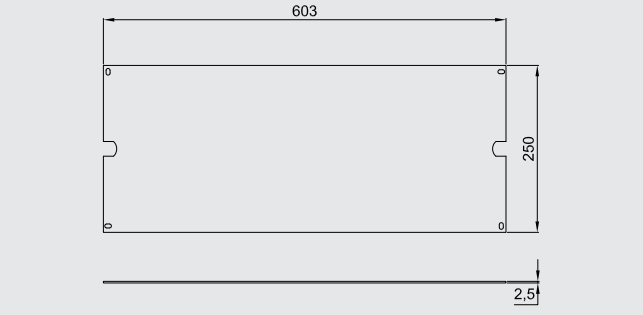

Max. number of terminals

X-SECT.	QTY.
2.5 mm²	2x111
4 mm²	2x93
6 mm²	2x69
10 mm²	2x55
16 mm²	2x46
25 mm²	2x34
70 mm²	2x27
120 mm²	17
185 mm²	15

Eg. 2x22= 2 rows of 22 terminals (total 44 terminals). The maximum number of standard terminals refers to the mounting of CABUR and/or WEIDMULLER terminals. The data in the table are given as a rough guide only based solely on the size of the enclosures and the space taken up by the terminals.

Number of cable glands

Hole type	A/C	B/D
M20	24	48
M25	18	36
M32	14	28
M40	8	16
M50	6	12
M63	3	6

As required by the current standard, holes can be drilled by Cortem or by authorized partners who hold a production notification in accordance with ATEX Directive .

Research conducted using Cortem's new NAV and NEV series cable glands.

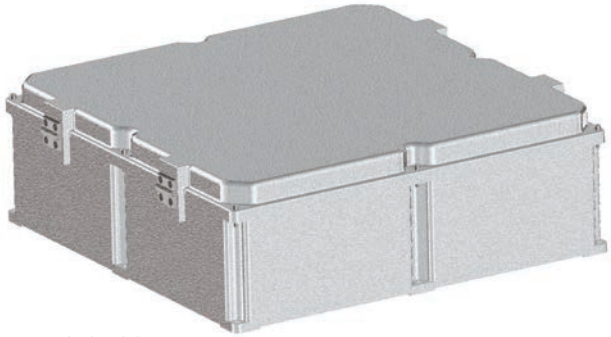

Zone 1,2,21,22.
Degree of protection IP66.
Aluminium alloy body and lid.
Silicone gasket.
Stainless steel bolts and screws. Complete with hinges.
Polyester coating RAL 7035.
Impact protection IK10.

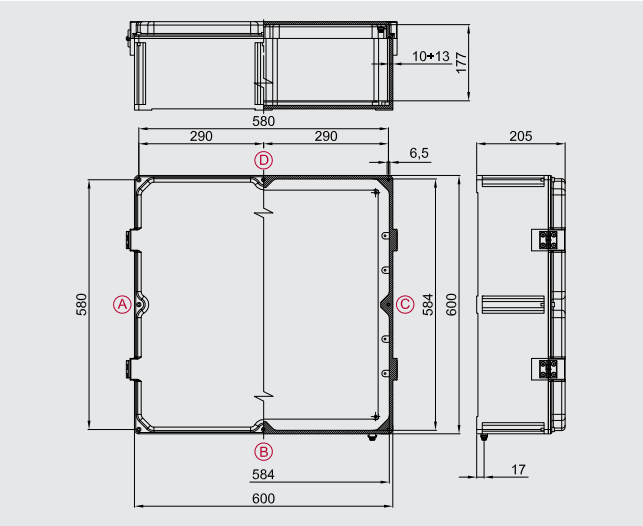

Ordering details

Standard aluminium enclosure:	**SAG606018**
Width/Depth/Height:	**600/600/206mm**

Certification data for enclosures with terminals

Group II Category 2GD

Zone 1- Zone 2 (Gas) Zone 21 - Zone 22 (Dust)

II 2GD Ex eb IIC T.. Gb - Ex tb IIIC T.. Db IP66

II 2GD Ex ia IIC T.. Gb - Ex ia IIIC T.. Db IP66

II 2GD Ex eb ia IIC T.. Gb - Ex tb ia IIIC T.. Db IP66

Ambient temperature: -40°C +55°C (+40°C)

Certification:

CESI 03 ATEX 333	(ATEX)
IEC Ex CES 13.0001	(IECEx)
Russian	(TR CU)
Brazilian	(INMETRO)

Accessories

Internal mounting plate:	**CODE**
2.5mm-thick aluminium:	**B60-229**
2.5mm-thick galvanized steel:	**B60-229AC**
2.5mm-thick stainless steel:	**B60-229IN**
Breather and drain valve:	**ECD-210S**

Other:
Internal anti-condensation coating
External polyester coatings in different colour
Terminals
Cable glands

Internal mounting plate dimensions

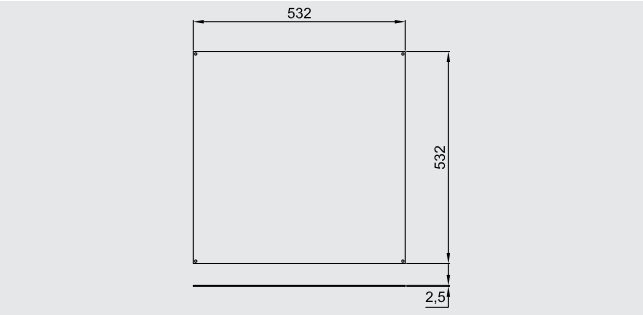

Max. number of terminals

X-SECT.	QTY.
2.5 mm²	5x99
4 mm²	5x83
6 mm²	5x62
10 mm²	5x49
16 mm²	5x41
25 mm²	4x31
70 mm²	3x24
120 mm²	15
185 mm²	13

Eg. 2x22= 2 rows of 22 terminals (total 44 terminals). The maximum number of standard terminals refers to the mounting of CABUR and/or WEIDMULLER terminals. The data in the table are given as a rough guide only based solely on the size of the enclosures and the space taken up by the terminals.

Number of cable glands

Hole type	A/C	B/D
M20	40	35
M25	30	26
M32	25	16
M40	12	10
M50	12	10
M63	4	4

As required by the current standard, holes can be drilled by Cortem or by authorized partners who hold a production notification in accordance with ATEX Directive .

Research conducted using Cortem's new NAV and NEV series cable glands.

Features of junction boxes for control, monitoring and signalling units

Control, monitoring and signalling units are used to produce control boards that, when positioned near the electrical equipment being controlled, enable the electrical system to operate correctly and guarantee the safety of personnel when maintenance is being performed on the system. Because they are fitted with a Manual/Automatic selector, they allow operators to select the appropriate conditions to enable work to be performed entirely safely. They offer protection and control for electrical equipment and control circuits located in explosion hazard areas and in particularly aggressive environments. They are used to hold electrical equipment, such as switches, indicators, contactors, transformers, analogue and digital components, etc.... with the option of external control by using lid-mounted Cortem control and signalling devices, such as control levers, pushbuttons, indicator lights, etc.... Cortem designs, develops and supplies full cabling for one or more enclosures tailored to your specific requirements, producing panel boards - including even extremely complex solutions - and providing a full inspection and testing service on request.

ELECTRICAL FEATURES

Rated voltage: 600 V ac/dc
Max. current on contacts: 16 A
Rated frequency: 50 / 60Hz

MINIMUM DISTANCES BETWEEN CORTEM Ex e CONTACTS (e.g. with reference to CESI 03 ATEX 115 certificate)

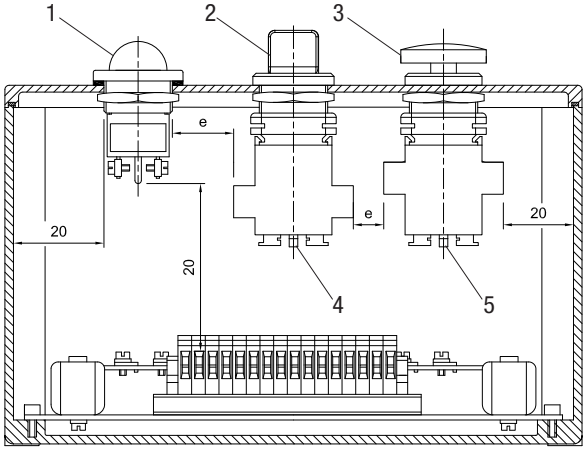

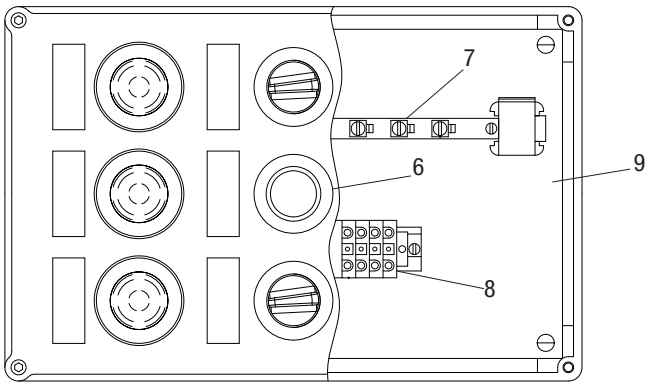

Key:
1. indicator light M-0612
2. rotating selector M-0604
3. emergency stop pushbutton M-0605
4. contact block M-0530
5. contact block M-0531
6. pushbutton M-0603
7. earth bar
8. terminals
9. internal mounting plate

Notes:
"e">12mm: standard version.
Suitable for voltage U<800V
"e">5mm: special versions.
Suitable for voltage U<250V

When determining enclosure size, what holes are drilled and what devices can be installed, we also need to take into account the space required for internal wiring and running the cables.

TYPE OF ENCLOSURE	Drilling area mm
SA090907	70x70
SA/SAG111108	90x90
SA/SAG171108	90x150
SA/SAG141410	127x127
SA202012	180x180
SA/SAG301410	127x285
SA/SAG302310	210x285
SA/SAG302318	210x285
SA/SAG473018	285x450
SAG623018	280x595
SAG606018	505x505

TYPE OF HOLES DRILLED

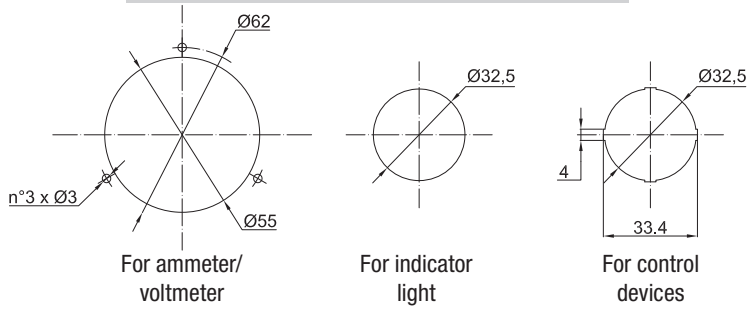

MINIMUM DISTANCES BETWEEN CORTEM Ex e DEVICES FOR PUSHBUTTON CONTROL STATIONS

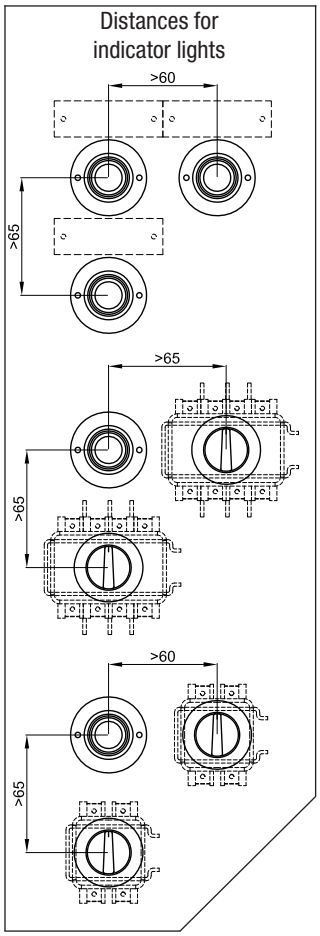

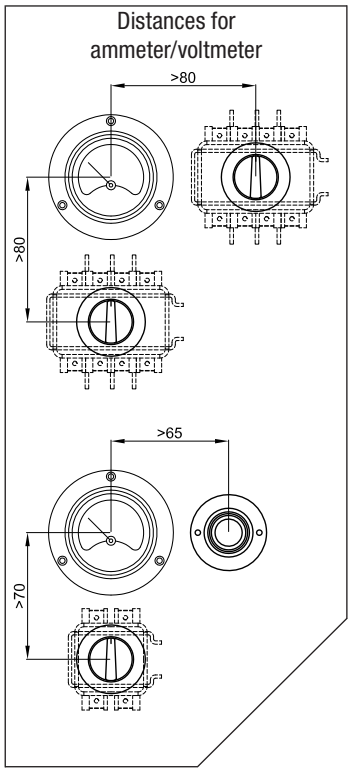

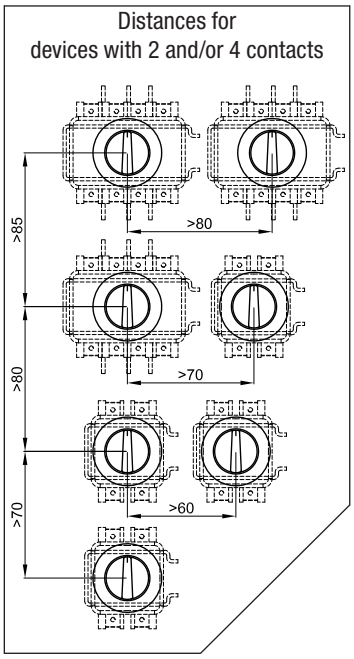

Notes:

Minimum distances between devices worked out for use of standard 60x20 plates.

Option of using up to 4 contacts per device for pushbutton M-0603 and selector M-0604.

Option of using up to 2 contacts per device for emergency stop pushbutton M-0605.
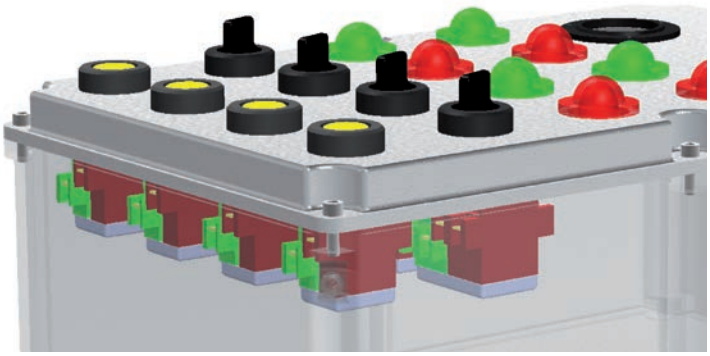
For more information, refer to the Ex e control, monitoring and signalling devices chapter.