SA-P

- Zone 1, 2, 21, 22
- Polyester junction boxes
- Choice of 9 sizes
- With antistatic property
- IK10 mechanical strength
- IP66

CORTEM® GROUP

SA-P series junction boxes: criteria for choosing the right product

When it comes to deciding on an increased safety enclosure, there is a whole series of essential data to be taken into account if you are to make the right choice: the mechanical strength of the materials, corrosion resistance, the IP protection rating and IK impact protection rating in the case of enclosures for watertight/ industrial use.

Mechanical strength

Properties	Unit	Stainless steel	Aluminium	Polyester
Density	g/cm^3	8,0	2,65	1,7
Tensile strength	Mpa	500-700	80-110	130
Elongation	%	60-40	4-10	2
Modulus of elasticity	Gpa	193	79	11
Yield strength	Mpa	≥ 200	80-165	-
Coeff. of thermal expansion (20-100°C)	$10^{-6}K^{-1}$	16	21	-
Resistivity	Ωm	$7,5x10^{-7}$	$4,8x10^{-8}$	-
Electrical conductivity	$\Omega^{-1}m^{-1}$	$1,33x10^{6}$	$2,08x10^{7}$	-

The graph below gives an overview of what use the various materials are suitable for based on the mechanical stress and harshness of the environmental conditions likely to be encountered.

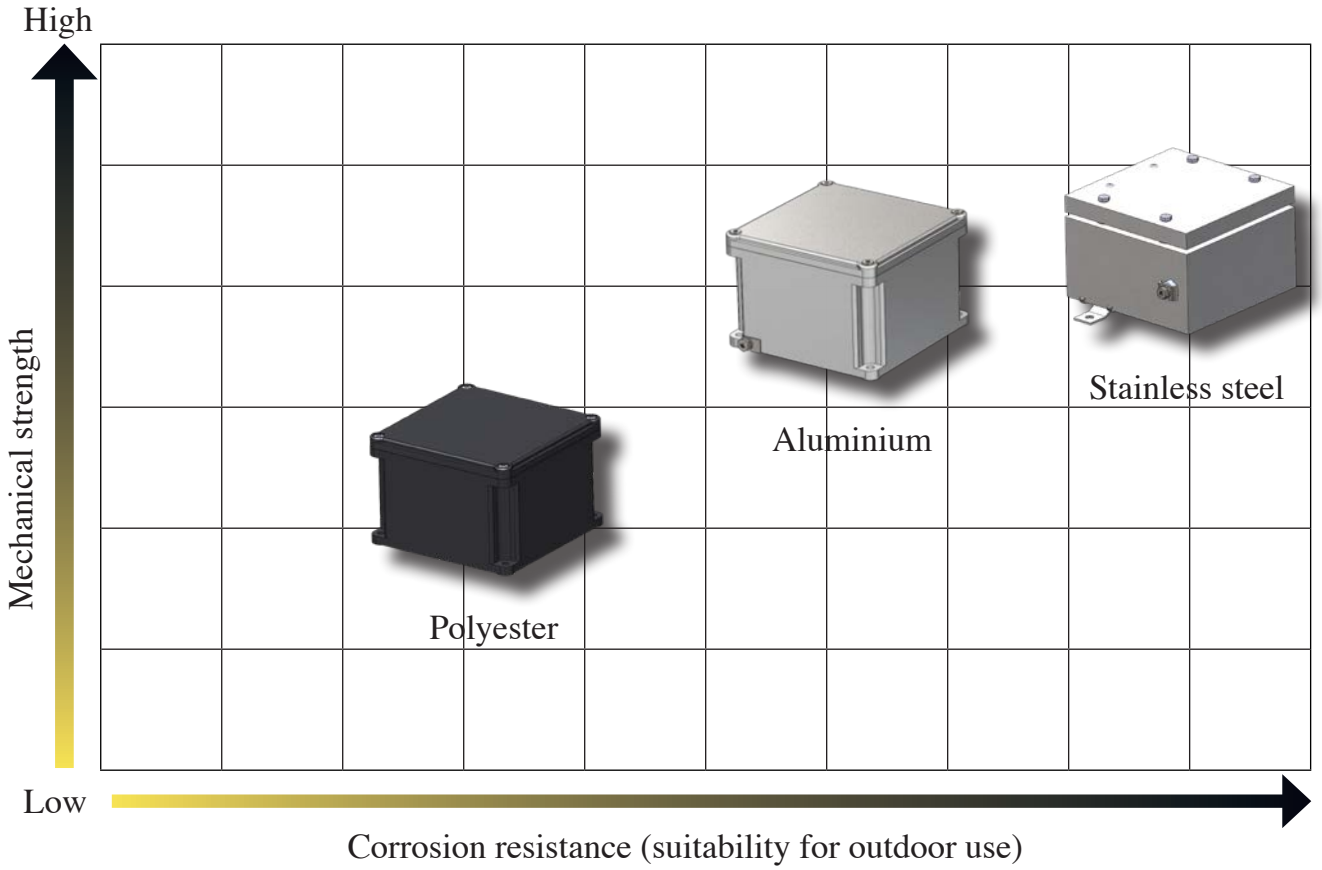

IP PROTECTION RATINGS (IEC 529, EN 60529-4, CEI 70-1 ed. 11/92)

The table gives protection ratings in accordance with standard CEI 70-1 ed. 11/92. Ratings are identified by the acronym IP followed by 2 digits, to which 2 letters may be added, indicating the degree to which persons are protected against access or other properties There is some variation in the application of ratings 7 and 8 relating to the ingress of liquids, with these ratings not always meaning that the item is suitable for lower levels (whereas IP rating x4 also covers the lower levels).

IMPACT PROTECTION RATINGS

This classification shows the acceptable level of strength, when evaluating a product's safety, and is mainly employed in relation to testing on electromechanical products.

1ST DIGIT
PROTECTION AGAINST SOLID OBJECTS

0	Not protected
1	Protected against solid objects greater than 50mm in Ø (Ø 50)
2	Protected against solid objects greater than 12mm in Ø (Ø 12)
3	Protected against solid objects greater than 2.5mm in Ø (Ø 2.5)
4	Protected against solid objects greater than 1mm in Ø (Ø 1)
5	Protected against dust
6	Totally protected against the ingress of dust

2ND DIGIT
PROTECTION AGAINST MOISTURE

0	Not protected
1	Protected against vertically falling drops of water
2	Protected against rain when tilted up to 15°
3	Protected against rain when tilted up to 60°
4	Protected against splashing water
5	Protected against jets of water from all directions
6	Protected against heavy seas
7	Protected against the effects of immersion
8	Protected against the effects of continuous immersion

PROTECTION AGAINST EXTERNAL MECHANICAL IMPACT *

IK00		Not protected
IK01	0.25 kg, 5.6 cm	Protected against impact energy of 0.15J
IK03	0.25 kg, 14 cm	Protected against impact energy of 0.35J
IK05	0.25 kg, 28 cm	Protected against impact energy of 0.7J
IK06	0.25 kg, 40 cm	Protected against impact energy of 1J
IK07	0.5 kg, 40 cm	Protected against impact energy of 2J
IK08	1.7 kg, 30 cm	Protected against impact energy of 5J
IK09	5 kg, 20 cm	Protected against impact energy of 10J
IK10	5 kg, 40 cm	Protected against impact energy of 20J

ADDITIONAL LETTER**

- **A** Protected against access with the back of the hand
- **B** Protected against access with a finger
- **C** Protected against access with a tool
- **D** Protected against access with a wire

OPTIONAL LETTER

- **H** High-voltage device
- **M** Tested against the harmful effects of water ingress with the equipment running
- **S** Tested against the harmful effects of water ingress with the equipment not running
- **W** Suitable for use in specified atmospheric conditions

* As per IEC EN 50102: 1996-05; IEC EN 60078-2-7-5: 1998-09.

** Optional letter describing protection against access by persons. Only used if protection against access to hazardous parts is greater than that indicated by the first digit, or if only protection against access to hazardous parts is given and an X is used in place of the first digit.

SA-...P series Polyester junction boxes 'Ex e'

SA...P series junction boxes are made from fibreglass-reinforced polyester. Because they are highly resistant to contamination from fuel oils and mechanical shock, in addition to being lightweight and practical, they can be installed in all industrial plants, especially those where there is a potential risk of explosion and/or fire due to the presence of combustible gases or dust, classified as Zone 1, 2, 21 and 22. The enclosures have special holes made in the base for easy wall mounting. The lid features a silicone gasket that is resistant to low and high temperatures and comes complete with AISI 304 stainless steel screws, which are arranged around the outside of the lid to ensure a tight seal with the IP66 rating. SA...P series enclosures are mainly used as junction boxes/ for routing cables for analogue or digital signals and/or for control and monitoring associated with equipment such as motors, fans, pumps and/or for giving physical readings such as flow rate, level, pressure, temperature, current, etc.. Terminal strips can be arranged inside the enclosure in various different configurations. The Cortem sales team will be able to advise you what enclosure best meets your needs based on: maximum number of terminals, number of holes per side, minimum distance involved and maximum power dissipation, ensuring everything is within the limits allowed by the certificate. 'Ex e' control, monitoring and signalling devices can be mounted on the lid in various different configurations based on your requirements and within the limits allowed by the certificate.

Cortem Group labels its products with a non-removable adhesive label featuring a hologram and an alphanumerical univocal code, as a safety measure against the illegal sale of fakes so that all the products are guaranteed as original. Non-compliance with the International standards entails serious risks for the environment, especially for those working daily on the plants.

TYPE AND APPLICATION

Choosing an appropriate container is a key step in the project development process, making it essential to approach the decision systematically, evaluating all variables methodically: where our equipment is being installed, the environmental conditions on site, what degree of protection it must have, what space is available and how it is due to be set up. Once you have processed all this information, you should be able to determine which product best suits the design requirements in question.

ENVIRONMENTAL CONDITIONS

The first factor to consider is what environmental conditions the equipment is going to be installed in, whether it will be indoors or outside, and what environments it is required to operate in: pharmaceutical, chemical, petrochemical, food, shipbuilding, agricultural industries...

DIMENSIONS

The size of the space available for inserting the enclosure and its components must be determined early on in the process.

DESIGN

Taking into account the technical aspect, product design and appearance is also important in ensuring the equipment to be installed in the enclosure is integrated seamlessly. A Cortem team of experts is on hand every day to address your questions and come up with the best solutions.

Cortem enclosures have passed:

- IP protection testing;
- IK strength testing;
- salt mist testing for corrosion resistance;
- heat resistance testing;
- low temperature resistance testing.

Application sectors:

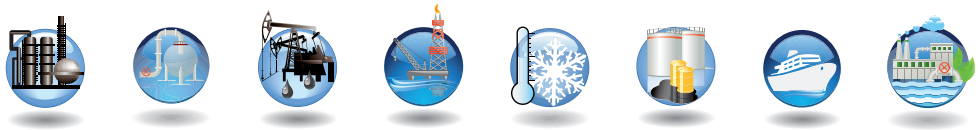

Oil refineries | **Chemical and petrochemical plants** | **Onshore plants** | **Offshore plants** | **Low temperatures** | **Fuel depots** | **Ships and shipbuilding** | **Wastewater treatment**

CERTIFICATION DATA FOR ENCLOSURES WITH TERMINALS

Classification:	Group II	Category 2GD		
Installation: EN 60079.14	zone 1 - zone 2 (Gas)	zone 21 - zone 22 (Dust)		
Marking:	CE 0722 Ex II 2GD Ex eb IIC T6/T5/T4 Gb - Ex tb IIIC T75°C/T110°C Db IP66			
	CE 0722 Ex II 2GD Ex e ia IIC T6/T5/T4 Gb - Ex ia IIIC T75°C/T110°C Db IP66			
	CE 0722 Ex II 2GD Ex eb ia IIC T6/T5/T4 Gb - Ex ia tb IIIC T75°C/T110°C Db IP66			
Certification:	ATEX CESI 03 ATEX 333			
	IEC Ex CES 13.0001	All IEC Ex, TR CU and INMETRO certification data can be downloaded from www.cortemgroup.com		
	ECASEx AVAILABLE			
	INMETRO DNV 15.0119			
	UL PENDING			
Standards:	CENELEC EN 60079-0: 2018, EN 60079-7: 2015, EN 60079-11: 2012, EN 60079-31: 2014 and EUROPEAN DIRECTIVE 2014/34/UE IEC 60079-0: 2017, IEC 60079-7: 2015, IEC 60079-11: 2011, IEC 60079-31: 2013			
Ambient Temp.:	See "ambient temperature range" table			
Degree of protection:	IP66			

AMBIENT TEMPERATURE RANGE

AMBIENT TEMPERATURE	TEMPERATURE CLASS	MAXIMUM SURFACE TEMPERATURE	MAXIMUM TERMINAL OPERATING TEMPERATURE
-40°C +40°C	T6	T75°C	+80°C
-40°C +55°C	T5	T75°C	+95°C

HIGH TEMPERATURE RANGE
(accordingly with the temperature allowed by the terminals)

AMBIENT TEMPERATURE	TEMPERATURE CLASS	MAXIMUM SURFACE TEMPERATURE	MAXIMUM TERMINAL OPERATING TEMPERATURE
-40°C +65°C**	T5	T75°C	+95°C

** For this temperature range the maximum dissipated power shall be reduced by 25% and the nominal current by 15%

CERTIFICATION DATA OF ENCLOSURES FOR CONTROL, MONITORING AND SIGNALLING UNITS

Classification:	Group II	Category 2GD		
Installation: EN 60079.14	zone 1 - zone 2 (Gas)	zone 21 - zone 22 (Dust)		
Marking:	CE 0722 Ex II2GD - Ex db eb IIC T6/T5 Gb - Ex tb IIIC T85°C/T100°C Db - IP66			
	CE 0722 Ex II2GD - Ex eb IIC T6/T5 Gb - Ex tb IIIC T85°C/T100°C Db - IP66 (When on the box is installed only ammeter or voltmeter type B-0140)			
Certification:	ATEX CESI 03 ATEX 115 X			
	IEC Ex CES 11.0032 X	All IEC Ex, TR CU and INMETRO certification data can be downloaded from www.cortemgroup.com		
	ECASEx AVAILABLE			
	TR CU AVAILABLE			
	INMETRO DNV 15.0125			
Standards:	CENELEC EN 60079-0: 2018, EN 60079-1: 2014, EN 60079-7: 2015, EN 60079-11: 2012, EN 60079-18: 20150 EN 60079-31: 2014, EN 60529: 1991 and EUROPEAN DIRECTIVE 2014/34/UE IEC 60079-0: 2017, IEC 60079-1: 2014, IEC 60079-7: 2015, IEC 60079-11: 2011, IEC 60079-18: 2014, IEC 60079-31:2013, IEC 60529: 2001			
Ambient Temp.:	-40°C +40°C	With temperature class T6 and maximum surface temperature T85°C.		
	-40°C +55°C	With temperature class T5 and maximum surface temperature T100°C.		
Degree of protection:	IP66			

CERTIFICATION DATA OF ENCLOSURES WITH EQUIPMENT (FIELDBUS, PROXIMITOR, HEATER...)

Classification:	Group II	Category 2GD		
Installation: EN 60079.14	zone 1 - zone 2 (Gas)	zone 21 - zone 22 (Dust)		
Marking:	CE 0722 Ex II2GD - Ex eb IIC T6/T5 Gb - Ex tb IIIC T85°C/T100°C Db - IP66			
	CE 0722 Ex II2(1)GD - Ex eb ib mb [ia Ga] IIC T4 Gb - Ex tb [ia Da] IIIC T85°C Db IP66			
Certification:	ATEX CML 16 ATEX 3163X			
	IEC Ex CML 16.0074X	All IEC Ex certification data can be downloaded from www.cortemgroup.com		
Standards:	CENELEC EN 60079-0: 2018, EN 60079-7: 2015+A1:2018, EN 60079-28: 2015, EN 60079-31: 2024 and EUROPEAN DIRECTIVE 2014/34/UE IEC 60079-0: 2017, IEC 60079-7: 2017, IEC 60079-28: 2015, IEC 60079-31:2022			
Ambient Temp.:	-40°C +65°C	The temperature classes and the maximum surface temperature must be selected according to the installed components. See the certificate.		
Degree of protection:	IP66			

GENERAL MECHANICAL PROPERTIES

Body and lid:	Made from polyester resin in black with antistatic properties
Impact protection rating:	IK10
Gasket:	Silicone, located between body and lid
Mounting:	Polyester feet for M6 screws
Certification label:	Aluminium plate riveted into lid
Bolts and screws:	Stainless steel captive variety

ACCESSORIES AVAILABLE ON REQUEST/ SPECIAL REQUESTS

Possible drilling of the enclosure bottom a maximum of one hole in the centre is allowed, 1" NPT o ISO M32x1,5.
Internal anti-condensation coating RAL 2004 (pure orange)
External polyester coating in different colour (specify the RAL number)
Breather valve; Drain valve
Internal mounting plate: stainless steel (code B...-229)
Earth screws in stainless steel
Terminal block mounting rails (code OBO2060/S)
ATEX-CERTIFIED TERMINALS: terminals must be chosen from the list of approved manufacturers: Cabur, Phoenix, ABB Entrelec, Wago, Weidmuller. When supplied as an Ex i enclosure (for low-voltage instruments), it comes with suitably identified blue terminals.
Only use cable glands that meet ATEX, IECEx directive requirements. Use gaskets and lock nuts on entries to ensure IP66 protection.

OVERVIEW OF SIZES

ENCLOSURE SELECTION CHART

Code	Outside dimensions			Inside dimensions				Mounting				Weight
	A	B	C	a	b	c	S1	X	Y	X1	ØD	kg
SA090907/P	90	90	73	84	84	52	3	74	74	-	6.5	0.30
SA111108/P	110	110	83	104	104	65	3	94	94	-	6.5	0.40
SA171108/P	170	110	83	164	104	65	3	154	94	-	6.5	0.80
SA141410/P	147	147	100	135	135	79	3	131	131	-	6.5	1.00
SA301410/P	305	147	110	296	138	90	4.5	285	127	-	6.5	1.90
SA302310/P	305	230	110	296	221	90	4.5	285	210	-	6.5	2.50
SA302318/P	305	230	190	296	221	165	4.5	285	210	-	6.5	3.10
SA473018/P	470	305	195	460	295	175	5	450	285	225	6.5	4.70
SA623018/P	620	305	185	608	293	160	5	560	285	260-300	8	6.30

DIMENSIONAL DRAWING

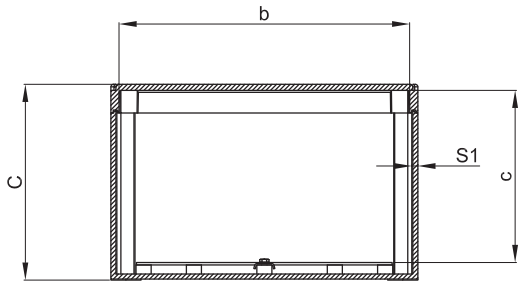

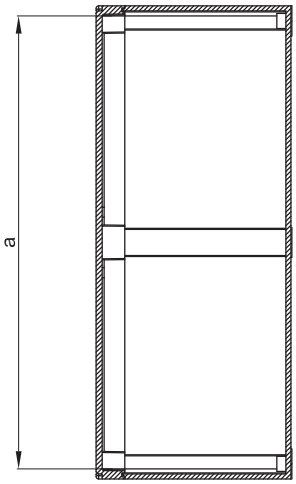

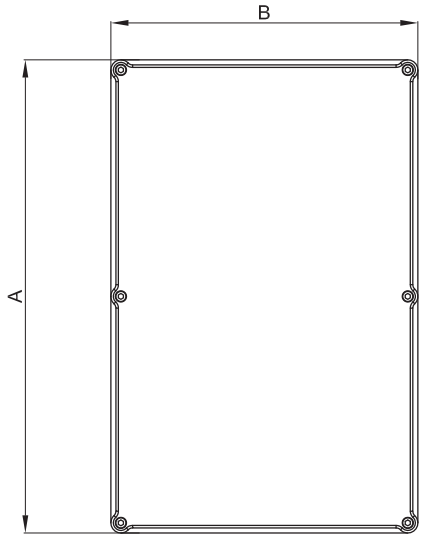

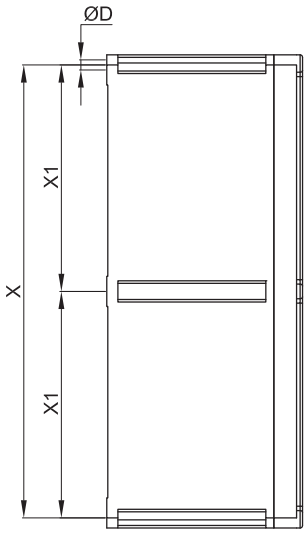

Dimensions in mm

THREAD COMPARISON CHART

D Thread diameter	1	2	3	4	5	6	7	8
ISO 261/965	20x1.5	25x1.5	32x1.5	40x1.5	50x1.5	63x1.5	75x1.5	90x1,5
Through hole	Ø20.5	Ø25.5	Ø32.5	Ø40.5	Ø50.5	Ø63.5	Ø75.5	Ø90,5

As required by the current standard, holes can be drilled by Cortem or by authorized partners who hold a production notification in accordance with ATEX Directive .

TYPE OF ENCLOSURE	HOLE DRILLING IN BODY																	
	Sides A and C									Sides B and D								
	Drilling area mm	MAXIMUM QUANTITY PER HOLE TYPE								Drilling area mm	MAXIMUM QUANTITY PER HOLE TYPE							
		1	2	3	4	5	6	7	8		1	2	3	4	5	6	7	8
SA090907/P	48x45	1	1	-	-	-	-	-	-	48x45	Square box							
SA111108/P	58x55	2	2	1	1	1	-	-	-	58x55	Square box							
SA171108/P	68x55	2	2	1	1	1	-	-	-	128x55	5	3	2	2	2	-	-	-
SA141410/P	100x65	6	3	2	1	1	1	-	-	100x65	Square box							
SA301410/P	100x65	6	3	2	1	1	1	-	-	255x65	12	11	5	4	4	3	-	-
SA302310/P	180x65	8	7	5	3	2	2	-	-	260x65	12	11	5	4	4	3	-	-
SA302318/P	180x140	16	14	9	8	5	4	2	2	258x140	24	22	14	11	8	6	3	2
SA473018/P	258x140	24	18	14	8	8	6	3	2	380x140	36	24	18	12	12	8	6	2
SA623018/P	248x117	18	15	10	8	6	3	2	2	434x117	32	26	16	14	12	6	4	4

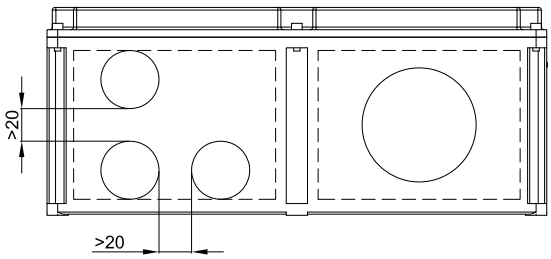

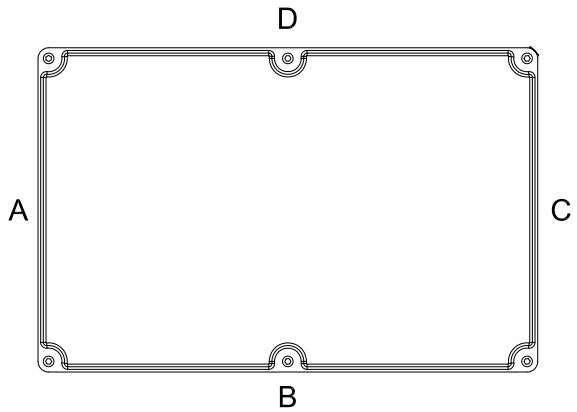

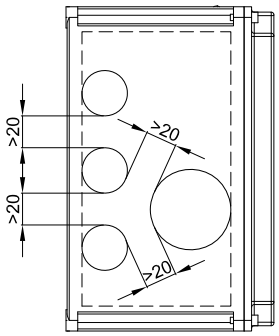

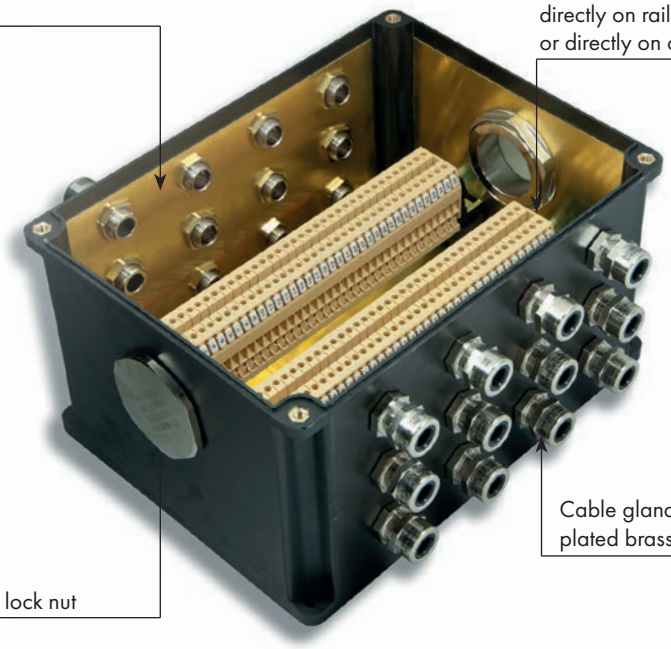

These enclosures are customized based on size, on the number of terminals or cables they are due to accommodate, or taking into account the number of cable entries and cabling requirements inside a system. Hence we can produce tailor-made solutions as long as you provide us with the appropriate parameters required at the quote request stage, such as the number of cable glands, unions or sealing fittings to be installed, so that we can determine the most suitable size of enclosure. All terminals can be fitted with your requested accessories and mounted on special rails that are fastened to the enclosure's internal mounting plates. Terminal strips can be arranged in various ways, as specified by the customer and always within the limits allowed by the certificate. The options are vertical, horizontal, in a number of rows, or on different levels using suitable spacers.

ELECTRICAL FEATURES

	Standard applications	Signal circuits applications	
		T6/T75°C max. Tamb +60°C	T4/T100°C max. Tamb +85°C
Rated voltage:	1000 Vac/dc	-	-
Rated current:	312 A	1 A for exec. **Ex eb** 100 mA for exec. **Ex ia**	10 A for exec. **Ex eb** 100 mA for exec. **Ex ia**
Rated frequency:	50/60 Hz	-	-
Terminal section:	1.5 ÷ 300 mm^2	-	-

Marking	Terminal type	Description
Ex II 2GD Ex eb IIC T... Gb - Ex tb IIIC T... Db IP66	Ex e terminals only	Enclosures containing increased safety terminals to standard EN 60079-7
Ex II 2GD Ex eb ia IIC T... Gb - Ex tb ia IIIC T... Db IP66	Ex e and Ex i terminals	Enclosures containing increased safety terminals and intrinsic safety terminals to standards EN 60079-7 and EN 60079-11
Ex II 2GD Ex ia IIC T... Gb - Ex ia IIIC T... Db IP66	Ex i terminals only	Enclosures containing intrinsic safety terminals to standard EN 60079-11; enclosures are still category 2

Examples of terminal strips with minimum installation distances

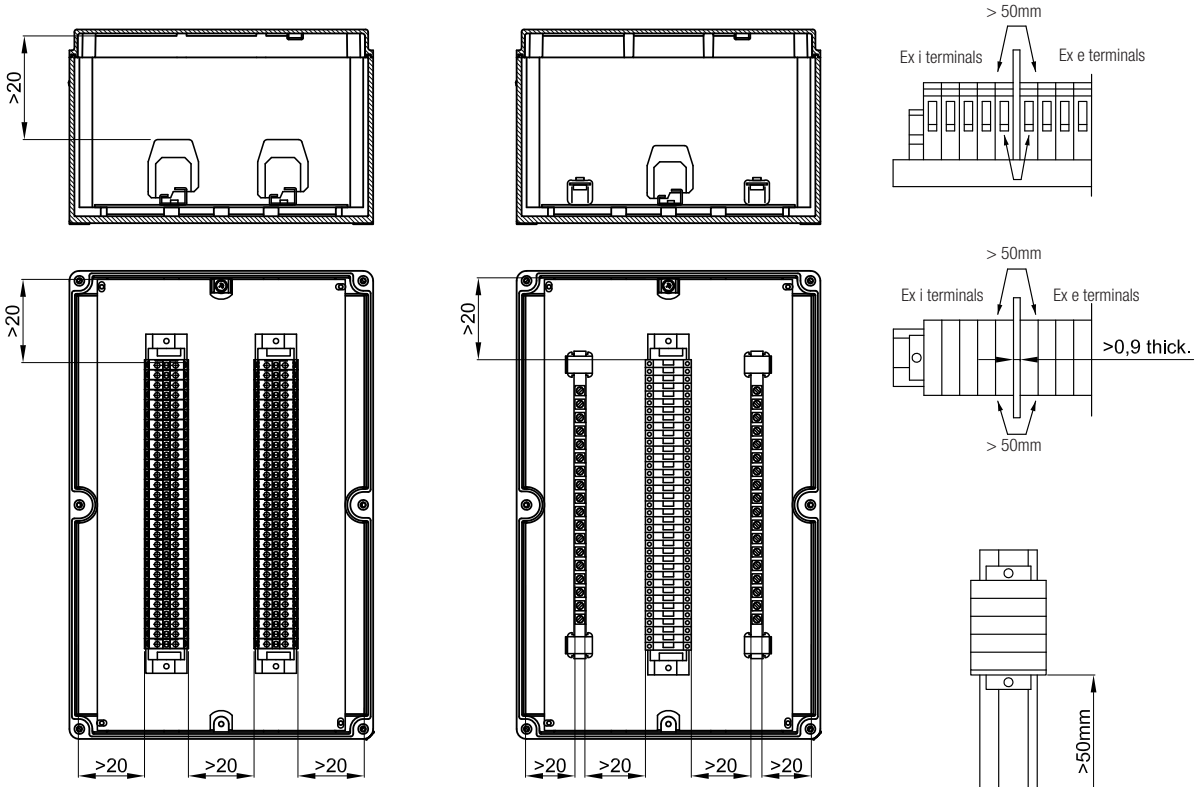

Notes:
Reference must be made to the minimum distances given, bearing in mind the space required for internal wiring.
Only ATEX-certified terminals are allowed inside the enclosures.
Ex i rated terminals must be suitably labelled or coloured differently so they are clearly identifiable.
Ex i cable entries must be suitably identified with either labelling or blue markings on cable glands or the enclosure's sides.

TYPE OF ENCLOSURE	MAXIMUM NUMBER OF TERMINALS HOUSED						
	TERMINAL CROSS-SECTIONAL AREA						
	1.5	2.5	4	6	10	16	25
SA090907/P	9	7	6	5			
SA111108/P	13	10	8	7	5		
SA171108/P	27	21	17	14	11	9	
SA141410/P	22	16	14	11	9	7	
SA301410/P	57	44	37	30	24	20	15
SA302310/P	2x58	2x44	2x37	2x30	2x24	2x20	2x15
SA302318/P	2x58	2x44	2x37	2x30	2x24	2x20	2x15
SA473018/P	2x97	2x74	2x63	2x51	2x41	2x34	2x25
SA623018/P	2x133	2x101	2x86	2x70	2x56	2x46	2x35

Eg. 2x22= 2 rows of 22 terminals (total 44 terminals). The maximum number of standard terminals refers to the mounting of CABUR terminals.
The data in the table are given as a rough guide only based solely on the size of the enclosures and the space taken up by the terminals.

The permissible maximum power dissipation, in order to retain a T6 temperature class with an ambient temperature up to +40°C or T5 class with an ambient temperature of 55°C, is not to exceed the values given in the tables below.
For an ambient temperature of +60°C, maximum power dissipation must be reduced by 25%, and rated current reduced by 15%.
The maximum current values for terminal strips used for low-voltage circuits (signalling units) with a T6 temperature class and maximum ambient temperature of +60°C or T4 and maximum ambient temperature +65°C and +85°C, are as follows:
+60°C T6 -> max 1A Ex e, max 100mA Ex ia
+85°C T4 -> max 10A Ex e, max 100mA Ex ia
The values given in the tables on the coming pages refer to the maximum number of conductors allowed for a conductor with a given cross-sectional area and a given maximum current. All incoming wires and active internal links (made by wires) count as wires. Earth connections (i.e. passive connections) do not count.
When DIN/Omega rails are installed on the internal mounting plate (instead of using the relevant mounting plate fastening holes), the number of terminals may be slightly less than the number given in the tables.
Other types of terminals can be used up to the space limit of the box. Whatever the case, all terminals used shall be ATEX and/or IEC Ex certified. Size 35mm^2 terminals can be used for conductors with a cross-sectional area of 25mm^2.
The maximum number of terminals and maximum number of rows given in the tables is an indicative value: you must take into account the cable entries on the sides of the boxes. The internal overall dimensions of cable glands/lock nuts and the overall dimensions of conductors must be taken into consideration to allow for wiring.
In some cases, it may be necessary to reduce the number of terminals or the number of rows.
Example of how to calculate the maximum number of conductors.
Referring to table SA141410/P: 6 conductors with 6mm^2 cross-section with 26A continuous current is the limit of this box.

Consequently, box SA141410/P is suitable for containing 3 x 6mm^2 terminals (2 conductors for each terminal) with a max. current of 26A.
There is space for 11 x 6mm^2 terminals in the box. The remaining 8 terminals (11-3) can be added and used for low-current circuits indicated in area "1" of the table (in this case max. 8-10A).

Combined mounting for electrical circuits with different sized cables is possible provided the values given are used proportionally. For example:

Nominal X-sect. area (mm^2)	Current (A)	Quantity	Capacity
2,5	8	16 (di 46)	34,8%
4	11	12 (di 36)	33,3%
10	26	4 (di 13)	30,8%
		Totale	98,9% <100%

Table showing maximum power dissipation and current for ambient temperature +40°C and +55°C

Enclosure	P [W]	Maximum current [A] per conductor cross-sectional area in mm^2						
		1.5	2.5	4	6	10	16	25
SA090907/P	5.6	11	15	21	26	37	49	67
SA111108/P	7.5	11	15	21	26	37	49	67
SA171108/P	8.8	11	15	21	26	37	49	67
SA141410/P	7.8	11	15	21	26	37	49	67
SA301410/P	15	11	15	21	26	37	49	67
SA302310/P	16	11	15	21	26	37	49	67
SA302318/P	17.5	11	15	21	26	37	49	67
SA473018/P	42	11	15	21	26	37	49	67
SA623018/P	52	11	15	21	26	37	49	67

Table showing maximum power dissipation and current for ambient temperature +60°C

Enclosure	P [W]	Maximum current [A] per conductor cross-sectional area in mm^2						
		1.5	2.5	4	6	10	16	25
SA090907/P	4.2	9	12	17	22	31	41	57
SA111108/P	5.6	9	12	17	22	31	41	57
SA171108/P	6.6	9	12	17	22	31	41	57
SA141410/P	5.8	9	12	17	22	31	41	57
SA301410/P	11.2	9	12	17	22	31	41	57
SA302310/P	12	9	12	17	22	31	41	57
SA302318/P	13.1	9	12	17	22	31	41	57
SA473018/P	31.5	9	12	17	22	31	41	57
SA623018/P	39	9	12	17	22	31	41	57

Instructions for determining which enclosure is best suited based on the planned number of conductors and terminals.

: In this section of the table that has not been filled in, once you have followed the instructions and complied with the values given for the enclosure's internal wiring, you can add as many terminals as you want up to the space limit of the box.

: Any wiring that falls within this section of the table that has not been filled in is not covered by the certificate.

"***C. No.***" row: the values given refer to the maximum number of CABUR terminals physically allowed inside the relevant enclosure. These values are expressed as the product of the rows multiplied by the number of terminals on each row.
"***W. No.***" row: the same as above, but this time referring to Weidmuller terminals.
The terminal brands are mentioned just to give an idea of the quantity of terminals that can be housed inside the enclosure.
The other values given in the cells along the table's diagonal define the maximum number of conductors allowed, based on their cross-sectional area and maximum current.

Tables showing maximum number of conductors

$$\left(\text{N° of terminals} = \frac{\text{n° of conductors}}{2}\right)$$

SA090907/P

Current (A)	Cross-sectional area in mm² 1.5	2.5	4	6	10	16	25
1							
8	17						
10	11						
11	9	15					
15		8	11				
21			6	7	10		
26				5	7	9	
37					3	4	6
49						3	3
67							2
C. No.							
W. No.	11	7	6	5			

Maximum power dissipation with T6 temperature class must not exceed 5.6W

SA111108/P

Current (A)	Cross-sectional area in mm² 1.5	2.5	4	6	10	16	25
1							
8	19	32					
10	12	20	29				
11	10	17	24				
15		9	13	17			
21			6	9	12		
26				6	8	11	
37					4	5	7
49						3	4
67							2
C. No.							
W. No.	16	11	9	7	5		

Maximum power dissipation with T6 temperature class must not exceed 7.5W

SA141410/P

Current (A)	Cross-sectional area in mm² 1.5	2.5	4	6	10	16	25
1							
8	19	32					
10	12	20	29				
11	10	17	24	32			
15		9	13	17	25		
21			7	9	13	18	23
26				6	8	11	15
37					4	6	7
49						3	4
67							2
C. No.		16	14	11	9	7	5
W. No.	26	18	15	11	9	7	5

Maximum power dissipation with T6 temperature class must not exceed 7.8W

SA171108/P

Current (A)	Cross-sectional area in mm² 1.5	2.5	4	6	10	16	25
1							
8	21	35					
10	14	23	32				
11	11	19	27	36			
15		10	14	19	28	38	
21			7	10	14	19	26
26				6	9	13	17
37					5	6	8
49						4	5
67							3
C. No.							
W. No.	32	22	19	14	11	9	

Maximum power dissipation with T6 temperature class must not exceed 8.8W

SA301410/P

Current (A)	Cross-sectional area in mm² 1.5	2.5	4	6	10	16	25
1							
8	27	46	67				
10	18	29	43	59	90		
11	15	24	36	49	74		
15		13	19	26	40	56	79
21			10	13	20	29	40
26				9	13	19	26
37					7	9	13
49						5	7
67							4
C. No.		43	37	30	24	20	14
W. No.	69	48	40	30	24	20	14

Maximum power dissipation with T6 temperature class must not exceed 15W

SA302310/P

Current (A)	Cross-sectional area in mm² 1.5	2.5	4	6	10	16	25
1							
8	27	46	68	94	142		
10	18	29	43	60	91		
11	15	24	36	50	75	107	
15		13	19	27	41	58	81
21			10	14	21	29	41
26				9	13	19	27
37					7	9	13
49						5	8
67							4
C. No.		2x44	2x37	2x30	2x24	2x20	15
W. No.	2x70	2x48	2x40	2x30	2x24	2x20	15

Maximum power dissipation with T6 temperature class must not exceed 16W

SA302318/P

Current (A)	Cross-sectional area in mm² 1.5	2.5	4	6	10	16	25
1							
8	30	49	73	102	155		
10	19	32	47	65	99		
11	16	26	39	54	82	118	166
15		14	21	29	44	63	89
21			11	15	23	32	45
26				10	15	21	30
37					7	10	15
49						6	8
67							4
C. No.		2x44	2x37	2x30	2x24	2x20	15
W. No.	2x70	2x48	2x40	2x30	2x24	2x20	15

Maximum power dissipation with T6 temperature class must not exceed 17.5W

SA473018/P

Current (A)	Cross-sectional area in mm² 1.5	2.5	4	6	10	16	25
1							
8	51	84	128	181	282		
10	32	54	82	116	180		
11	27	45	68	96	149	219	317
15		24	36	51	80	118	170
21			19	26	41	60	87
26				17	27	39	57
37					13	19	28
49						11	16
67							9
C. No.		2x74	2x62	2x51	2x40	2x33	2x25
W. No.	2x116	2x81	2x68	2x51	2x40	2x33	2x25

Maximum power dissipation with T6 temperature class must not exceed 42W

SA623018/P

Current (A)	Cross-sectional area in mm² 1.5	2.5	4	6	10	16	25
1							
8	59	98	150	215	338		
10	38	63	96	137	216		
11	31	52	80	113	179	265	388
15		28	43	61	96	143	208
21			22	31	49	73	106
26				20	32	47	69
37					16	23	34
49						13	20
67							10
C. No.		2x101	2x85	2x69	2x55	2x46	2x34
W. No.	2x159	2x111	2x93	2x69	2x55	2x46	2x34

Maximum power dissipation with T6 temperature class must not exceed 52W

Codes of terminals used to determine maximum number of terminals

The other values given in the cells along the table's diagonal define the maximum number of conductors allowed, based on their cross-sectional area and maximum current.

Sq mm	1.5	2.5	4	6	10	16	25	35
Cabur		CBD 2	CBD 4	CBD 6	CBD 10	CBD 16	CBD 35	
Weidmuller	WDU 1.5	WDU 2.5	WDU 4	WDU 6	WDU 10	WDU 16	WDU 35	

Sq mm	50	70	95	120	150	185	240	300
Cabur	CBD 50	CBD 70	GPM95/CC	GPM150/CC		GPM240/CC		
Weidmuller	WDU 50	WDU 70	WDU 70/95	WDU 120/150		WDU 240		

ATEX - IECEx label for terminal enclosures

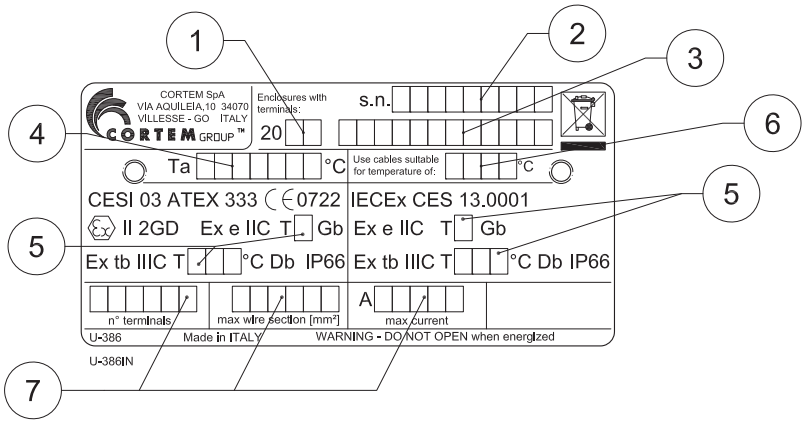

Data filled in:

1. year of manufacture
2. serial number
3. product code
4. ambient temperature
5. temperature class and maximum surface
6. temperature of cables
7. electrical specs per certificate

DON'T FORGET TO ORDER THE ACCESSORIES

Example: Enclosure type SA302310/P + Internal mounting plate B32-229 + Cable glands, unions + other...see key

	Continuity plate for all four enclosure sides	Continuity plate for single enclosure side	
	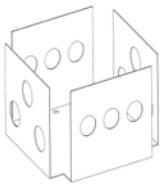	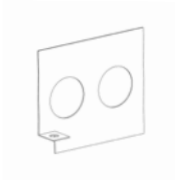	
Enclosure	Plate Code	Plate Code	
		Long side	Short side
SA090907/P	B-388	B-455	
SA111108/P	B-389	B-456	
SA141410/P	B-390	B-457	
SA171108/P	B-391	B-458	B-456
SA301410/P	B-392	B-459	B-457
SA302310/P	B-393	B-459	B-460
SA302318/P	B-394	B-461	B-462
SA473018/P	B-395	(2x) B-462	B-461
SA623018/P	-	(2x) B-463	B-463

JUNCTION BOXES WITH EQUIPMENT (FIELDBUS, PROXIMITOR, HEATER...)

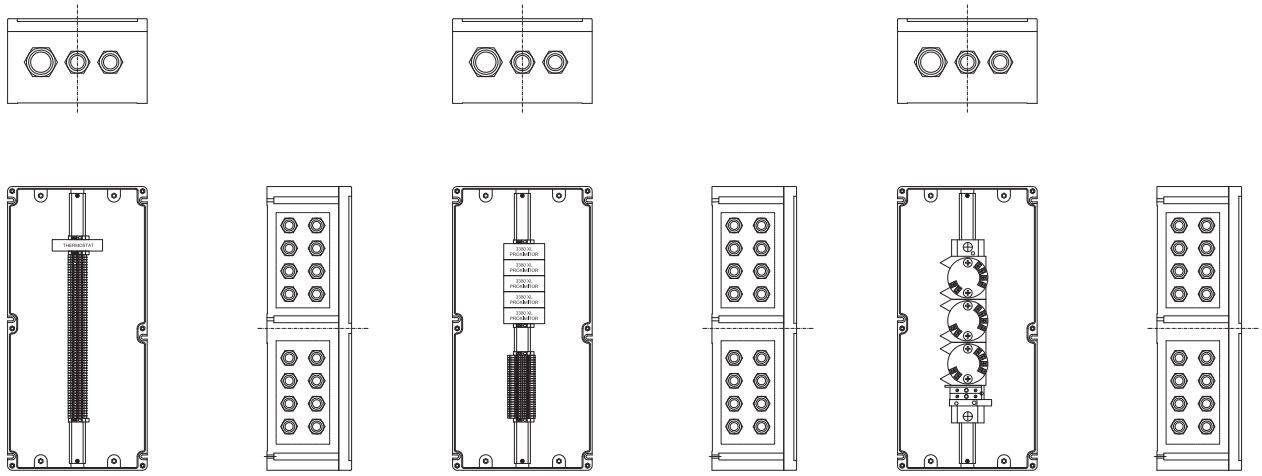

Example of junction box with thermostat

Example of junction box with proximitor

Example of junction box with transmitter

Equipment that can be installed in the junction boxes in accordance with the CML 16 ATEX 3163X or IECEx CML 16.0074X certificate are described in the following table:

Part	Number of certificate	Marking
Series 3300XL Proximitor	BAS 99 ATEX 1101 IECEx BAS 04.0055X	Ex ia IIC
Splice Cassette type 8186	PTB 10 ATEX 2015U IECEx PTB 10.0060U	Ex op pr IIC
Enclosure Heater (TEF Series)	NEMKO 11 ATEX 1098X IECEx NEM 11.0005X	Ex e IIC; Ex e mb IIC
Heater, type SL.. THERM D.. T..	PTB 02 ATEX 1116X IECEx PTB 07.0055X	Ex db IIC; Ex tb IIIC
Heater, type CP.. THERM D.. T..	PTB 02 ATEX 1041X IECEx PTB 07.0052X	Ex db IIC; Ex tb IIIC
Fieldbus Segment protector type R-SP-E	PTB 04 ATEX 2100X IECEx PTB 05.0010X	Ex e mb IIC; Ex eb mb IIC
Temperature Trasmitter Model IPAQ C202X	KIVA 15 ATEX 0033X IECEx KIWA 15.0015X	Ex ia IIC
Temperature Trasmitter Model IPAQ C520X	KIVA 14 ATEX 0003X IECEx KIWA 14.0001X	Ex ia IIC
Fieldbus Barrier type R4D0-FB-IA	BVS 13 ATEX E 121X IECEx BVS 13.0119X	Ex e ib mb [ia Ga] IIC T4 Gb Ex e ib mb [ia IIIC Da] IIC T4 Gb
Heating Resistor type CREx 020	LCIE 01 ATEX 6073X IECEx LCI 07.0020X	Ex d IIC; Ex tb IIIC
Regulating Thermostat type REx	LCIE 01 ATEX 6074 IECEx LCI 07.0021	Ex d IIC; Ex tb IIIC
Interconnection block for fieldbus type F240 to F273	KEMA 03 ATEX 1555X IECEx LCI 11.0068X	Ex ia IIC
Fieldbus XE Megablock and Terminator	KEMA 05 ATEX 2006 IECEx DEK 16.0036X	Ex eb mb IIC
Model 644R HART Temperature Transmitter	BAS 00 ATEX 1033X IECEx BAS 07.0053X	Ex ia IIC
Model 644H Fieldbus Temperature Trasmitter	BAS 03 ATEX 0499X IECEx BAS 07.0053X	Ex ia IIC
Enhanced model 644 Temperature Transmitter	BAS 12 ATEX 0101X IECEx BAS 12.0069X	Ex ia IIC
Transmitter Type T32.**.*-*	BVS 08 ATEX 019X IECEx BVS 08.0018X	Ex ia IIC
Load isolation Switch Module CZ0513 Series	CML 19 ATEX 1179U IECEx CML 19.0055U	Ex db eb IIC Gb
Handle of switch CZ8000	CML 17 ATEX 3102U IECEx CML 17.0042U	Ex eb IIC; Ex tb IIIC
Operators M-0603, M-0604,M-0605	CESI 09 ATEX 075U IECEx CES 11.0029U	Ex eb IIC; Ex tb IIIC
Pilot LED M-0612 and M-0487	CESI 09 ATEX 060U IECEx CES 11.0030U	Ex db IIC; Ex db eb IIC; Ex tb IIIC
Contact blocks type M-0530 and M-0531	CESI 09 ATEX 016U IECEx CES 11.0031U	Ex de IIC
Ammeter type B-0140A and Voltmeter B-0140V	CESI 04 ATEX 128U IECEx CES 12.0022U	Ex e IIC; Ex tb IIIC
Temperature transmitter iTEMP Type TMT82..A1/2 and TMT82..A3/4/5	EPS 17 ATEX 1074X IECEx EPS 17.0039X	Ex ia IIC
Surge protector type Blitzductor Connect BCO *L2 BD EX 24	TUV 19 ATEX 8476X IECEx TUR 20.0025X	Ex ia [ia Ga] IIC Gb; Ex ib IIC T6 Gb; [Ex ia Da] IIIC

Attention: please contact our sales office for further information.

ILLUSTRATION	DESCRIPTION	MODEL	DIMENSIONS A	DIMENSIONS B	CODE	KEY
	Internal mounting plates Thickness 2.5mm Aluminium Galvanized steel (B...-229AC) Stainless steel (B...-229IN)	SA090907/P	82	48	B09-229	ACCESSORY SPARE PART
		SA111108/P	100	68	B11-229	
		SA141410/P	137	105	B14-229	
		SA171108/P	159	67	B17-229	
		SA301410/P	285	97	B31-229	
		SA302310/P SA302318/P	285	180	B32-229	
		SA473018/P	453	254	B43-229	
		SA623018/P	603	249	B64-229	

ILLUSTRATION	DESCRIPTION	MODEL		FEATURES	CODE	KEY
	Breather and drain valve	Thread diameter ISO 7-R 3/8"		Material: stainless steel	ECD-210S	ACCESSORY SPARE PART
	Breather valve	ISO M20x1,5		Material: stainless steel	ECDE-B1B	ACCESSORY SPARE PART
		ISO M25x1,5			ECDE-B2B	
	Breather and drain valve	ISO M20x1,5			ECDE-D1B	
		ISO M25x1,5			ECDE-D2B	
	Hinges (2 per enclosure)	Low lid enclosures	SA090907/P SA111108/P SA141410/P SA171108/P	Material: stainless steel	B-0105/R	ACCESSORY SPARE PART
		High lid enclosures	SA301410/P SA302310_18/P SA473018/P SA623018/P		B-0106/R	
	Through earth connection	M8		Material: stainless steel	K-0307/1	ACCESSORY SPARE PART
		M6			K-0307/2	
	Entry blanking plugs	For models and codes, visit www.cortemgroup.com			PLG...	ACCESSORY SPARE PART
	Cable glands complete with O-rings and unions				NAV... NEV...	ACCESSORY SPARE PART
	Adapters and reducers				RE...	ACCESSORY SPARE PART
	Lid-mounted control and signalling devices	For control and signalling device models and codes, see control and monitoring device chapter			M-0... (Ex de)	ACCESSORY SPARE PART
	Brass continuity plates for earthing	For models and codes, see chart given earlier			B-...	ACCESSORY SPARE PART

SA-...P series Polyester junction boxes 'Ex e'

Zone 1,2,21,22.
Degree of protection IP66.
Polyester body and lid.
Silicone gasket.
Stainless steel bolts and screws.
Impact protection IK10.

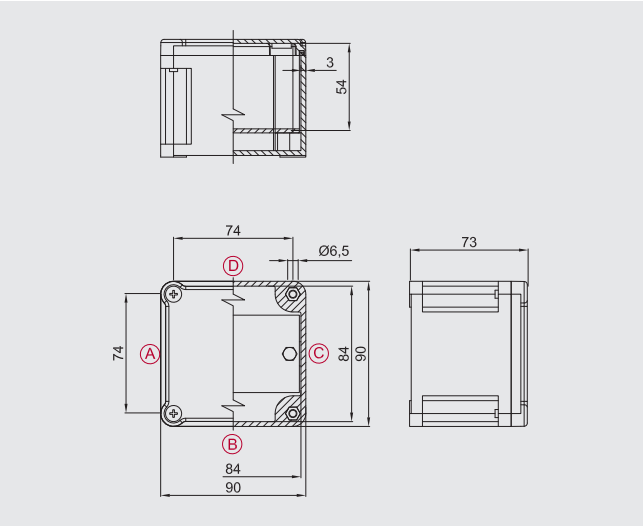

Ordering details

Standard polyester enclosure:	**SA090907/P**
Width/Depth/Height:	**90/90/73mm**

Certification data for enclosures with terminals

Group II Category 2GD

Zone 1- Zone 2 (Gas) Zone 21 - Zone 22 (Dust)

II 2GD Ex eb IIC T.. Gb - Ex tb IIIC T.. Db IP66

II 2GD Ex ia IIC T.. Gb - Ex ia IIIC T.. Db IP66

II 2GD Ex eb ia IIC T.. Gb - Ex tb ia IIIC T.. Db IP66

Ambient temperature: -40°C +55°C (+40°C)

Certification:

CESI 03 ATEX 333	(ATEX)
IEC Ex CES 13.0001	(IECEx)
Russian	(TR CU)
Brasilian	(INMETRO)

Accessories

Internal mounting plate:	**CODE**
2.5mm-thick aluminium:	**B09-229**
2.5mm-thick galvanized steel:	**B09-229AC**
2.5mm-thick stainless steel:	**B09-229IN**
Hinges (two each type):	**B-0105/R**
Breather and drain valve:	**ECD-210S**

Other:
1mm-thick brass continuity plates
Terminals
Cable glands
Through earth screw

Internal mounting plate dimensions

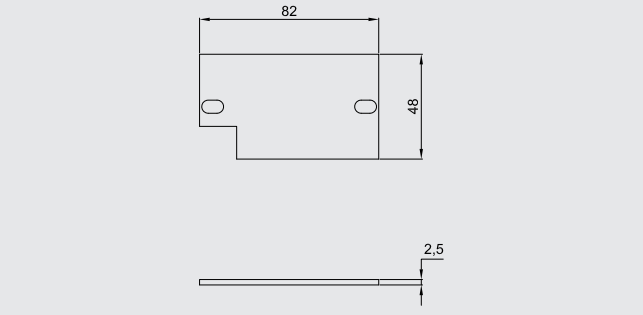

Max. number of terminals

X-SECT.	QTY.
1.5 mm²	1x9
2.5 mm²	1x7
4 mm²	1x6
6 mm²	1x5
10 mm²	-
16 mm²	-
25 mm²	-

Eg. 2x22= 2 rows of 22 terminals (total 44 terminals). The maximum number of standard terminals refers to the mounting of CABUR terminals.
The data in the table are given as a rough guide only based solely on the size of the enclosures and the space taken up by the terminals.

Number of cable glands

Hole type	A/C	B/D
M16	1	1
M20	1	1
M25	1	1
M32	-	-
M40	-	-
M50	-	-
M63	-	-

As required by the current standard, holes can be drilled by Cortem or by authorized partners who hold a production notification in accordance with ATEX Directive .

Research conducted using Cortem's new NAV and NEV series cable glands.

Zone 1,2,21,22.
Degree of protection IP66.
Polyester body and lid.
Silicone gasket.
Stainless steel bolts and screws.
Impact protection IK10.

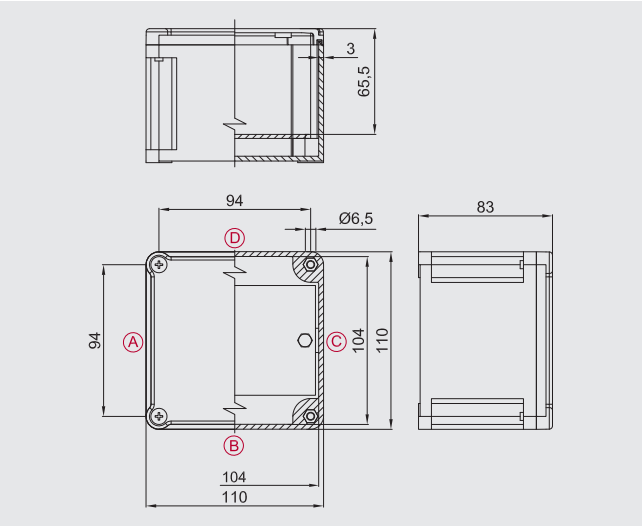

Ordering details

Standard polyester enclosure:	**SA111108/P**
Width/Depth/Height:	**110/110/83mm**

Certification data for enclosures with terminals

Group II Category 2GD

Zone 1- Zone 2 (Gas) Zone 21 - Zone 22 (Dust)

II 2GD Ex eb IIC T.. Gb - Ex tb IIIC T.. Db IP66

II 2GD Ex ia IIC T.. Gb - Ex ia IIIC T.. Db IP66

II 2GD Ex eb ia IIC T.. Gb - Ex tb ia IIIC T.. Db IP66

Ambient temperature: -40°C +55°C (+40°C)

Certification:

CESI 03 ATEX 333	(ATEX)
IEC Ex CES 13.0001	(IECEx)
Russian	(TR CU)
Brasilian	(INMETRO)

Accessories

Internal mounting plate:	**CODE**
2.5mm-thick aluminium:	**B11-229**
2.5mm-thick galvanized steel:	**B11-229AC**
2.5mm-thick stainless steel:	**B11-229IN**
Hinges (two each type):	**B-0105/R**
Breather and drain valve:	**ECD-210S**

Other:
1mm-thick brass continuity plates
Terminals
Cable glands
Through earth screw

Internal mounting plate dimensions

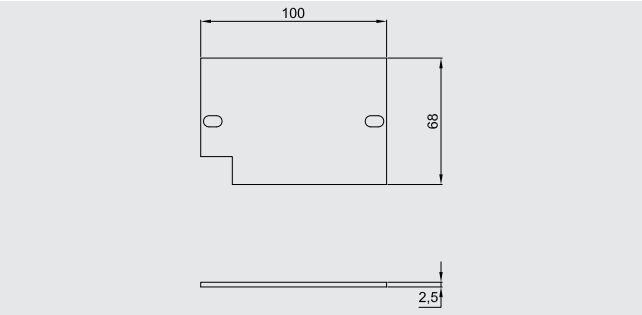

Max. number of terminals

X-SECT.	QTY.
1.5 mm²	1x13
2.5 mm²	1x10
4 mm²	1x8
6 mm²	1x7
10 mm²	1x5
16 mm²	-
25 mm²	-

Eg. 2x22= 2 rows of 22 terminals (total 44 terminals). The maximum number of standard terminals refers to the mounting of CABUR terminals.
The data in the table are given as a rough guide only based solely on the size of the enclosures and the space taken up by the terminals.

Number of cable glands

Hole type	A/C	B/D
M16	3	3
M20	2	2
M25	1	1
M32	1	1
M40	-	-
M50	-	-
M63	-	-

As required by the current standard, holes can be drilled by Cortem or by authorized partners who hold a production notification in accordance with ATEX Directive .

Research conducted using Cortem's new NAV and NEV series cable glands.

Zone 1,2,21,22.
Degree of protection IP66.
Polyester body and lid.
Silicone gasket.
Stainless steel bolts and screws.
Impact protection IK10.

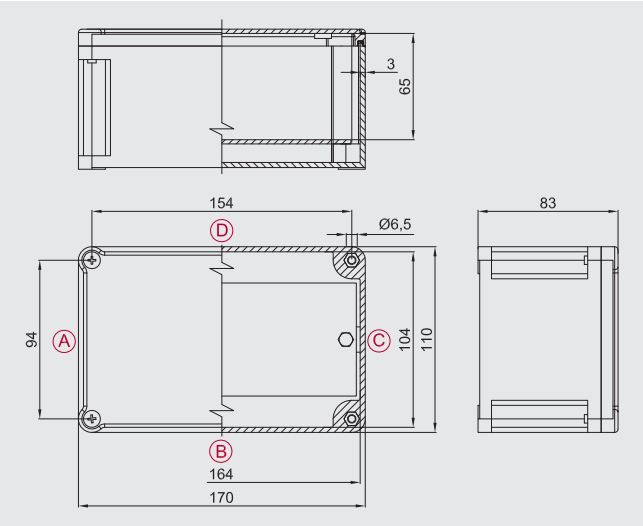

Ordering details

Standard polyester enclosure:	**SA171108/P**
Width/Depth/Height:	**170/110/83mm**

Certification data for enclosures with terminals

Group II Category 2GD

Zone 1- Zone 2 (Gas) Zone 21 - Zone 22 (Dust)

II 2GD Ex eb IIC T.. Gb - Ex tb IIIC T.. Db IP66

II 2GD Ex ia IIC T.. Gb - Ex ia IIIC T.. Db IP66

II 2GD Ex eb ia IIC T.. Gb - Ex tb ia IIIC T.. Db IP66

Ambient temperature: -40°C +55°C (+40°C)

Certification:

CESI 03 ATEX 333	(ATEX)
IEC Ex CES 13.0001	(IECEx)
Russian	(TR CU)
Brasilian	(INMETRO)

Internal mounting plate dimensions

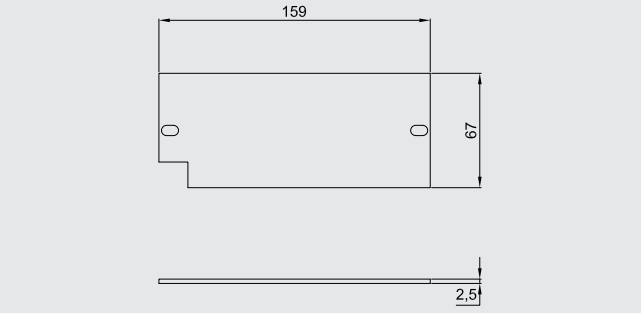

Max. number of terminals

X-SECT.	QTY.
1.5 mm²	1x27
2.5 mm²	1x21
4 mm²	1x17
6 mm²	1x14
10 mm²	1x11
16 mm²	1x9
25 mm²	-

Eg. 2x22= 2 rows of 22 terminals (total 44 terminals). The maximum number of standard terminals refers to the mounting of CABUR terminals.
The data in the table are given as a rough guide only based solely on the size of the enclosures and the space taken up by the terminals.

Accessories

Internal mounting plate:	**CODE**
2.5mm-thick aluminium:	**B17-229**
2.5mm-thick galvanized steel:	**B17-229AC**
2.5mm-thick stainless steel:	**B17-229IN**
Hinges (two each type):	**B-0105/R**
Breather and drain valve:	**ECD-210S**

Other:
1mm-thick brass continuity plates
Terminals
Cable glands
Through earth screw

Number of cable glands

Hole type	A/C	B/D
M16	3	8
M20	2	5
M25	1	3
M32	1	2
M40	-	-
M50	-	-
M63	-	-

As required by the current standard, holes can be drilled by Cortem or by authorized partners who hold a production notification in accordance with ATEX Directive .

Research conducted using Cortem's new NAV and NEV series cable glands.

Zone 1,2,21,22.
Degree of protection IP66.
Polyester body and lid.
Silicone gasket.
Stainless steel bolts and screws.
Impact protection IK10.

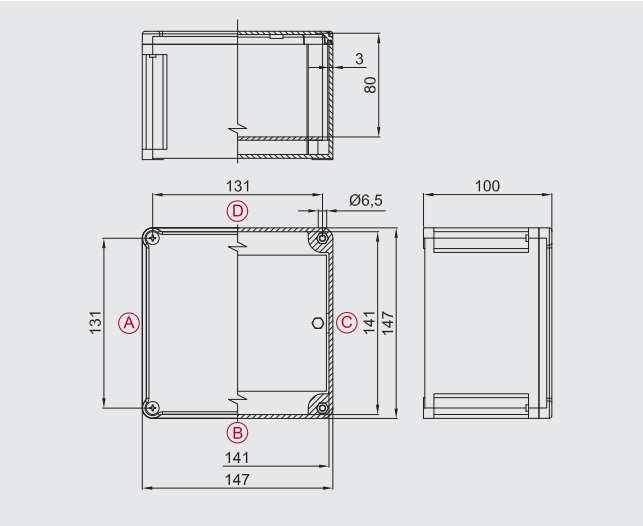

Ordering details

Standard polyester enclosure:	**SA141410/P**
Width/Depth/Height:	**147/147/100mm**

Certification data for enclosures with terminals

Group II Category 2GD

Zone 1- Zone 2 (Gas) Zone 21 - Zone 22 (Dust)

II 2GD Ex eb IIC T.. Gb - Ex tb IIIC T.. Db IP66

II 2GD Ex ia IIC T.. Gb - Ex ia IIIC T.. Db IP66

II 2GD Ex eb ia IIC T.. Gb - Ex tb ia IIIC T.. Db IP66

Ambient temperature: -40°C +55°C (+40°C)

Certification:

CESI 03 ATEX 333	(ATEX)
IEC Ex CES 13.0001	(IECEx)
Russian	(TR CU)
Brasilian	(INMETRO)

Accessories

Internal mounting plate:	**CODE**
2.5mm-thick aluminium:	**B14-229**
2.5mm-thick galvanized steel:	**B14-229AC**
2.5mm-thick stainless steel:	**B14-229IN**
Hinges (two each type):	**B-0105/R**
Breather and drain valve:	**ECD-210S**

Other:
1mm-thick brass continuity plates
Terminals
Cable glands
Through earth screw

Internal mounting plate dimensions

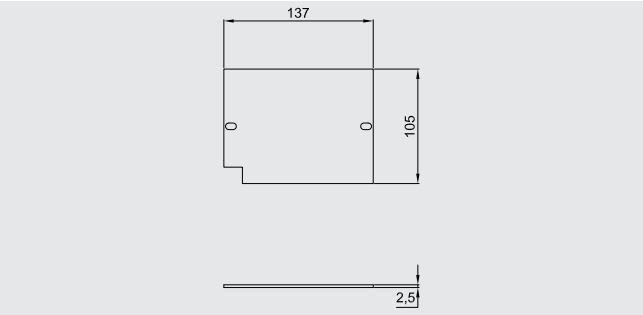

Max. number of terminals

X-SECT.	QTY.
1.5 mm²	1x22
2.5 mm²	1x16
4 mm²	1x14
6 mm²	1x11
10 mm²	1x9
16 mm²	1x7
25 mm²	-
70 mm²	-
120 mm²	-

Eg. 2x22= 2 rows of 22 terminals (total 44 terminals). The maximum number of standard terminals refers to the mounting of CABUR terminals.
The data in the table are given as a rough guide only based solely on the size of the enclosures and the space taken up by the terminals.

Number of cable glands

Hole type	A/C	B/D
M16	6	6
M20	6	6
M25	3	3
M32	2	2
M40	1	1
M50	-	-
M63	-	-

As required by the current standard, holes can be drilled by Cortem or by authorized partners who hold a production notification in accordance with ATEX Directive .

Research conducted using Cortem's new NAV and NEV series cable glands.

SA-...P series Polyester junction boxes 'Ex e'

Zone 1,2,21,22.
Degree of protection IP66.
Polyester body and lid.
Silicone gasket.
Stainless steel bolts and screws.
Impact protection IK10.

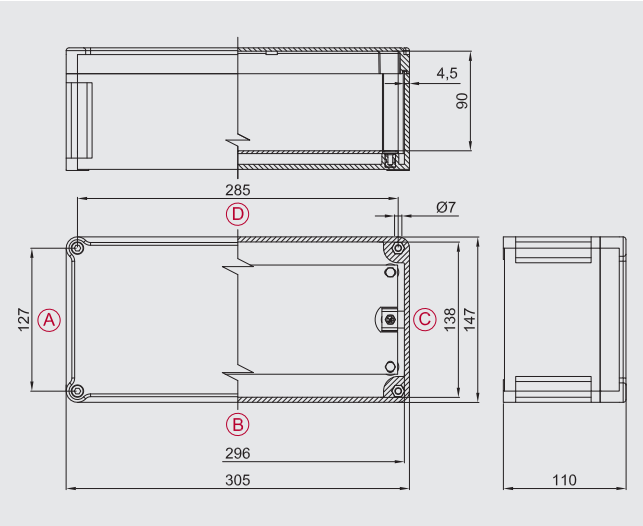

Ordering details

Standard polyester enclosure:	**SA301410/P**
Width/Depth/Height:	**305/147/110mm**

Certification data for enclosures with terminals

Group II Category 2GD

Zone 1- Zone 2 (Gas) Zone 21 - Zone 22 (Dust)

II 2GD Ex eb IIC T.. Gb - Ex tb IIIC T.. Db IP66

II 2GD Ex ia IIC T.. Gb - Ex ia IIIC T.. Db IP66

II 2GD Ex eb ia IIC T.. Gb - Ex tb ia IIIC T.. Db IP66

Ambient temperature: -40°C +55°C (+40°C)

Certification:

CESI 03 ATEX 333	(ATEX)
IEC Ex CES 13.0001	(IECEx)
Russian	(TR CU)
Brasilian	(INMETRO)

Internal mounting plate dimensions

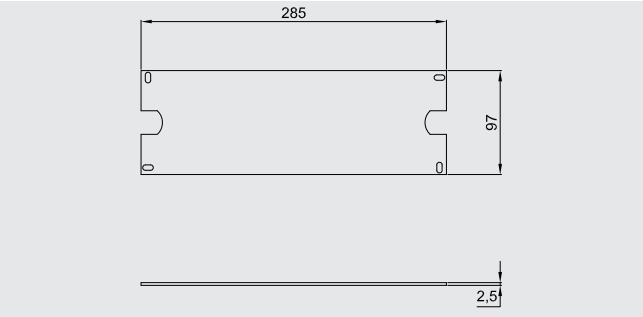

Max. number of terminals

X-SECT.	QTY.
1,5 mm²	1x57
2,5 mm²	1x44
4 mm²	1x37
6 mm²	1x30
10 mm²	1x24
16 mm²	1x20
25 mm²	1x15

Eg. 2x22= 2 rows of 22 terminals (total 44 terminals). The maximum number of standard terminals refers to the mounting of CABUR terminals.
The data in the table are given as a rough guide only based solely on the size of the enclosures and the space taken up by the terminals.

Accessories

Internal mounting plate:	**CODE**
2.5mm-thick aluminium:	**B31-229**
2.5mm-thick galvanized steel:	**B31-229AC**
2.5mm-thick stainless steel:	**B31-229IN**
Hinges (two each type):	**B-0106/R**
Breather and drain valve:	**ECD-210S**

Other:
1mm-thick brass continuity plates
Terminals
Cable glands
Through earth screw

Number of cable glands

Hole type	A/C	B/D
M16	6	14
M20	4	12
M25	3	9
M32	2	5
M40	1	4
M50	1	3
M63	-	-

As required by the current standard, holes can be drilled by Cortem or by authorized partners who hold a production notification in accordance with ATEX Directive .

Research conducted using Cortem's new NAV and NEV series cable glands.

Zone 1,2,21,22.
Degree of protection IP66.
Polyester body and lid.
Silicone gasket.
Stainless steel bolts and screws.
Impact protection IK10.

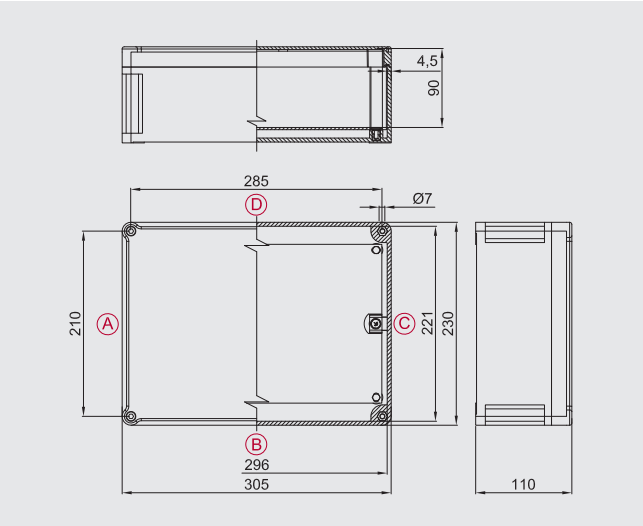

Ordering details

Standard polyester enclosure:	**SA302310/P**
Width/Depth/Height:	**305/230/110mm**

Certification data for enclosures with terminals

Group II Category 2GD

Zone 1- Zone 2 (Gas) Zone 21 - Zone 22 (Dust)

II 2GD Ex eb IIC T.. Gb - Ex tb IIIC T.. Db IP66

II 2GD Ex ia IIC T.. Gb - Ex ia IIIC T.. Db IP66

II 2GD Ex eb ia IIC T.. Gb - Ex tb ia IIIC T.. Db IP66

Ambient temperature: -40°C +55°C (+40°C)

Certification:

CESI 03 ATEX 333	(ATEX)
IEC Ex CES 13.0001	(IECEx)
Russian	(TR CU)
Brasilian	(INMETRO)

Accessories

Internal mounting plate:	**CODE**
2.5mm-thick aluminium:	**B32-229**
2.5mm-thick galvanized steel:	**B32-229AC**
2.5mm-thick stainless steel:	**B32-229IN**
Hinges (two each type):	**B-0106/R**
Breather and drain valve:	**ECD-210S**

Other:
1mm-thick brass continuity plates
Terminals
Cable glands
Through earth screw

Internal mounting plate dimensions

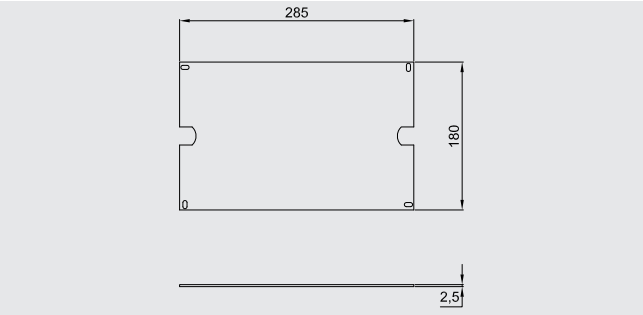

Max. number of terminals

X-SECT.	QTY.
1,5 mm²	2x58
2,5 mm²	2x44
4 mm²	2x37
6 mm²	2x30
10 mm²	2x24
16 mm²	2x20
25 mm²	2x15

Eg. 2x22= 2 rows of 22 terminals (total 44 terminals). The maximum number of standard terminals refers to the mounting of CABUR terminals.
The data in the table are given as a rough guide only based solely on the size of the enclosures and the space taken up by the terminals.

Number of cable glands

Hole type	A/C	B/D
M16	10	14
M20	10	12
M25	4	9
M32	3	5
M40	3	4
M50	-	-
M63	-	-

As required by the current standard, holes can be drilled by Cortem or by authorized partners who hold a production notification in accordance with ATEX Directive .

Research conducted using Cortem's new NAV and NEV series cable glands.

SA-...P series Polyester junction boxes 'Ex e'

Zone 1,2,21,22.
Degree of protection IP66.
Polyester body and lid.
Silicone gasket.
Stainless steel bolts and screws.
Impact protection IK10.

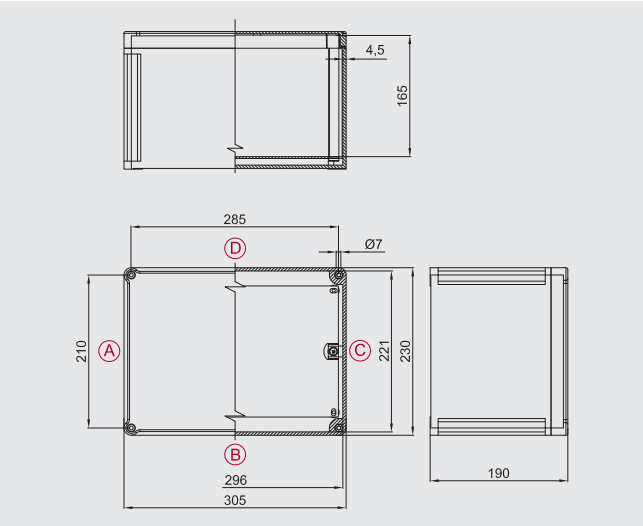

Ordering details

Standard polyester enclosure:	**SA302318/P**
Width/Depth/Height:	**305/230/190mm**

Certification data for enclosures with terminals

Group II Category 2GD

Zone 1- Zone 2 (Gas) Zone 21 - Zone 22 (Dust)

II 2GD Ex eb IIC T.. Gb - Ex tb IIIC T.. Db IP66

II 2GD Ex ia IIC T.. Gb - Ex ia IIIC T.. Db IP66

II 2GD Ex eb ia IIC T.. Gb - Ex tb ia IIIC T.. Db IP66

Ambient temperature: -40°C +55°C (+40°C)

Certification:

CESI 03 ATEX 333	(ATEX)
IEC Ex CES 13.0001	(IECEx)
Russian	(TR CU)
Brasilian	(INMETRO)

Internal mounting plate dimensions

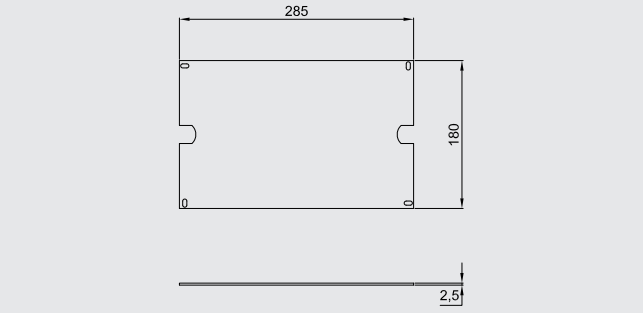

Accessories

Internal mounting plate:	**CODE**
2.5mm-thick aluminium:	**B32-229**
2.5mm-thick galvanized steel:	**B32-229AC**
2.5mm-thick stainless steel:	**B32-229IN**
Hinges (two each type):	**B-0106/R**
Breather and drain valve:	**ECD-210S**

Other:
1mm-thick brass continuity plates
Terminals
Cable glands
Through earth screw

Max. number of terminals

X-SECT.	QTY.
1.5 mm²	2x58
2.5 mm²	2x44
4 mm²	2x37
6 mm²	2x30
10 mm²	2x24
16 mm²	2x20
25 mm²	2x15

Eg. 2x22= 2 rows of 22 terminals (total 44 terminals). The maximum number of standard terminals refers to the mounting of CABUR terminals.
The data in the table are given as a rough guide only based solely on the size of the enclosures and the space taken up by the terminals.

Number of cable glands

Hole type	A/C	B/D
M20	18	24
M25	12	18
M32	9	14
M40	6	8
M50	4	6
M63	2	3

As required by the current standard, holes can be drilled by Cortem or by authorized partners who hold a production notification in accordance with ATEX Directive .

Research conducted using Cortem's new NAV and NEV series cable glands.

Zone 1,2,21,22.
Degree of protection IP66.
Polyester body and lid.
Silicone gasket.
Stainless steel bolts and screws.
Impact protection IK10.

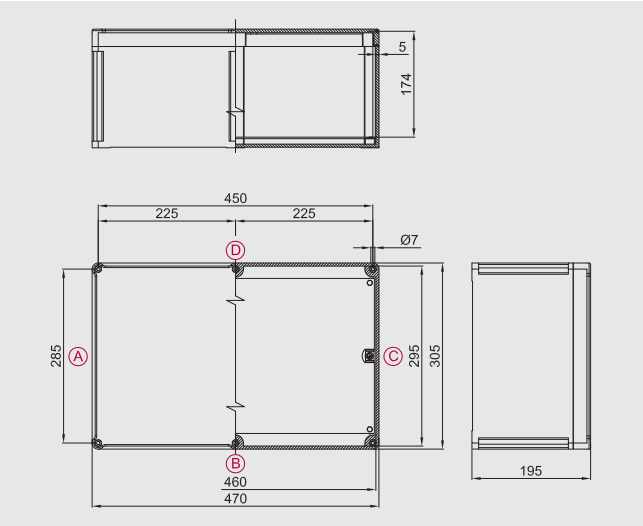

Ordering details

Standard polyester enclosure:	**SA473018/P**
Width/Depth/Height:	**470/305/195mm**

Certification data for enclosures with terminals

Group II Category 2GD

Zone 1- Zone 2 (Gas) Zone 21 - Zone 22 (Dust)

II 2GD Ex eb IIC T.. Gb - Ex tb IIIC T.. Db IP66

II 2GD Ex ia IIC T.. Gb - Ex ia IIIC T.. Db IP66

II 2GD Ex eb ia IIC T.. Gb - Ex tb ia IIIC T.. Db IP66

Ambient temperature: -40°C +55°C (+40°C)

Certification:

CESI 03 ATEX 333	(ATEX)
IEC Ex CES 13.0001	(IECEx)
Russian	(TR CU)
Brasilian	(INMETRO)

Accessories

Internal mounting plate:	**CODE**
2.5mm-thick aluminium:	**B43-229**
2.5mm-thick galvanized steel:	**B43-229AC**
2.5mm-thick stainless steel:	**B43-229IN**
Hinges (two each type):	**B-0106/R**
Breather and drain valve:	**ECD-210S**

Other:
1mm-thick brass continuity plates
Terminals
Cable glands
Through earth screw

Internal mounting plate dimensions

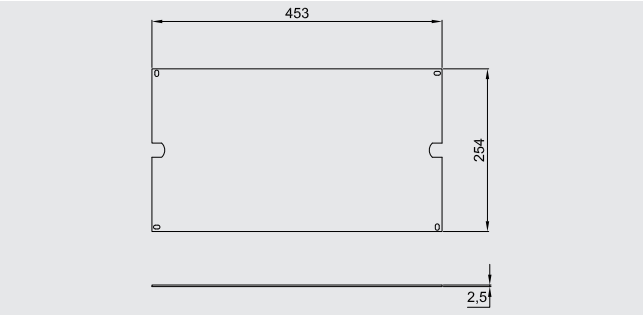

Max. number of terminals

X-SECT.	QTY.
1.5 mm²	2x97
2.5 mm²	2x74
4 mm²	2x63
6 mm²	2x51
10 mm²	2x41
16 mm²	2x34
25 mm²	2x25

Eg. 2x22= 2 rows of 22 terminals (total 44 terminals). The maximum number of standard terminals refers to the mounting of CABUR terminals.
The data in the table are given as a rough guide only based solely on the size of the enclosures and the space taken up by the terminals.

Number of cable glands

Hole type	A/C	B/D
M20	24	36
M25	18	24
M32	14	18
M40	8	12
M50	8	12
M63	3	4

As required by the current standard, holes can be drilled by Cortem or by authorized partners who hold a production notification in accordance with ATEX Directive .

Research conducted using Cortem's new NAV and NEV series cable glands.

SA-...P series Polyester junction boxes 'Ex e'

Zone 1,2,21,22.
Degree of protection IP66.
Polyester body and lid.
Silicone gasket.
Stainless steel bolts and screws.
Impact protection IK10.

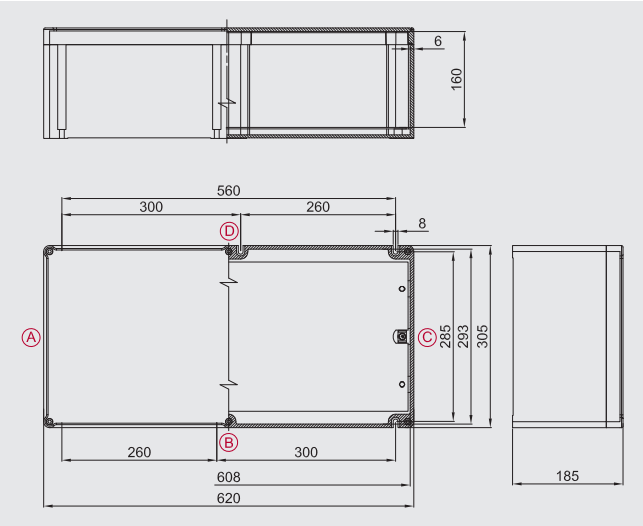

Ordering details

Standard polyester enclosure:	**SA623018/P**
Width/Depth/Height:	**620/305/185mm**

Certification data for enclosures with terminals

Group II Category 2GD

Zone 1- Zone 2 (Gas) Zone 21 - Zone 22 (Dust)

II 2GD Ex eb IIC T.. Gb - Ex tb IIIC T.. Db IP66

II 2GD Ex ia IIC T.. Gb - Ex ia IIIC T.. Db IP66

II 2GD Ex eb ia IIC T.. Gb - Ex tb ia IIIC T.. Db IP66

Ambient temperature: -40°C +55°C (+40°C)

Certification:

CESI 03 ATEX 333	(ATEX)
IEC Ex CES 13.0001	(IECEx)
Russian	(TR CU)
Brasilian	(INMETRO)

Accessories

Internal mounting plate:	**CODE**
2.5mm-thick aluminium:	**B64-229**
2.5mm-thick galvanized steel:	**B64-229AC**
2.5mm-thick stainless steel:	**B64-229IN**
Hinges (two each type):	**B-0106/R**
Breather and drain valve:	**ECD-210S**

Other:
1mm-thick brass continuity plates
Terminals
Cable glands
Through earth screw

Internal mounting plate dimensions

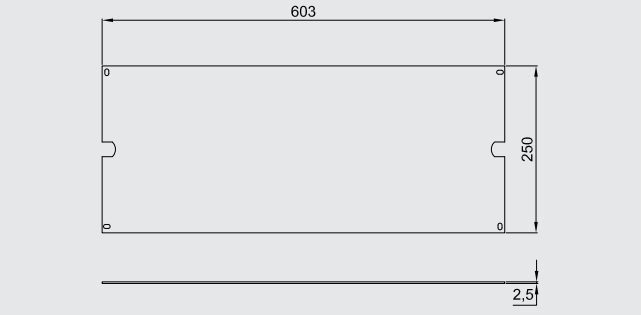

Max. number of terminals

X-SECT.	QTY.
1,5 mm²	2x133
2,5 mm²	2x101
4 mm²	2x86
6 mm²	2x70
10 mm²	2x56
16 mm²	2x46
25 mm²	2x35

Eg. 2x22= 2 rows of 22 terminals (total 44 terminals). The maximum number of standard terminals refers to the mounting of CABUR terminals.
The data in the table are given as a rough guide only based solely on the size of the enclosures and the space taken up by the terminals.

Number of cable glands

Hole type	A/C	B/D
M20	24	48
M25	18	36
M32	14	28
M40	8	16
M50	8	12
M63	3	6

As required by the current standard, holes can be drilled by Cortem or by authorized partners who hold a production notification in accordance with ATEX Directive .

Research conducted using Cortem's new NAV and NEV series cable glands.

Features of junction boxes for control, monitoring and signalling units

Control, monitoring and signalling units are used to produce control boards that, when positioned near the electrical equipment being controlled, enable the electrical system to operate correctly and guarantee the safety of personnel when maintenance is being performed on the system. Because they are fitted with a Manual/Automatic selector, they allow operators to select the appropriate conditions to enable work to be performed entirely safely. They offer protection and control for electrical equipment and control circuits located in explosion hazard areas and in particularly aggressive environments. They are used to hold electrical equipment, such as switches, indicators, contactors, transformers, analogue and digital components, etc.... with the option of external control by using lid-mounted Cortem control and signalling devices, such as control levers, pushbuttons, indicator lights, etc.... Cortem designs, develops and supplies full cabling for one or more enclosures tailored to your specific requirements, producing panel boards - including even extremely complex solutions - and providing a full inspection and testing service on request.

ELECTRICAL FEATURES

Rated voltage: 600 V ac/dc
Max. current on contacts: 16 A
Rated frequency: 50 / 60Hz

MINIMUM DISTANCES BETWEEN CORTEM Ex e CONTACTS (e.g. with reference to CESI 03 ATEX 115 certificate)

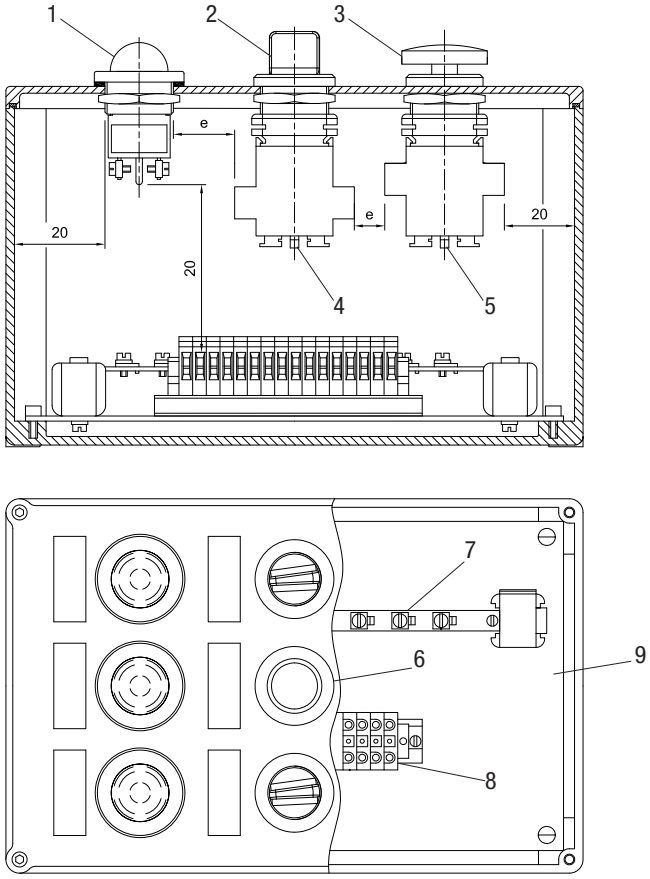

Key:
1. indicator light M-0612
2. rotating selector M-0604
3. emergency stop pushbutton M-0605
4. contact block M-0530
5. contact block M-0531
6. pushbutton M-0603
7. earth bar
8. terminals
9. internal mounting plate

Notes:
"e">12mm: standard version.
Suitable for voltage U<800V
"e">5mm: special versions.
Suitable for voltage U<250V

When determining enclosure size, what holes are drilled and what devices can be installed, we also need to take into account the space required for internal wiring and running the cables.

Features of junction boxes for control, monitoring and signalling units

TYPE OF ENCLOSURE	Drilling area mm
SA090907/P	70x70
SA111108/P	90x90
SA171108/P	90x150
SA141410/P	127x127
SA301410/P	127x285
SA302310/P	210x285
SA302318/P	210x285
SA473018/P	285x450
SA623018/P	596x280

TYPE OF HOLES DRILLED

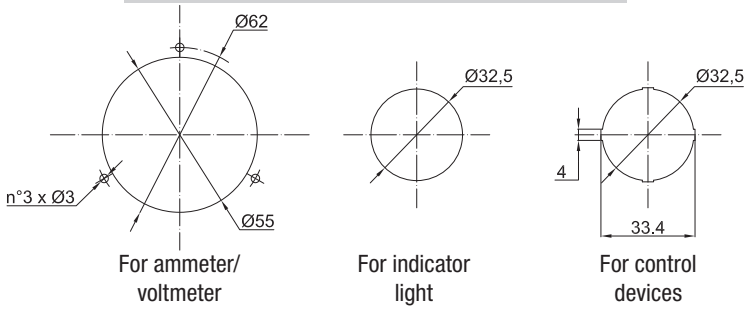

MINIMUM DISTANCES BETWEEN CORTEM Ex e DEVICES FOR PUSHBUTTON CONTROL STATIONS

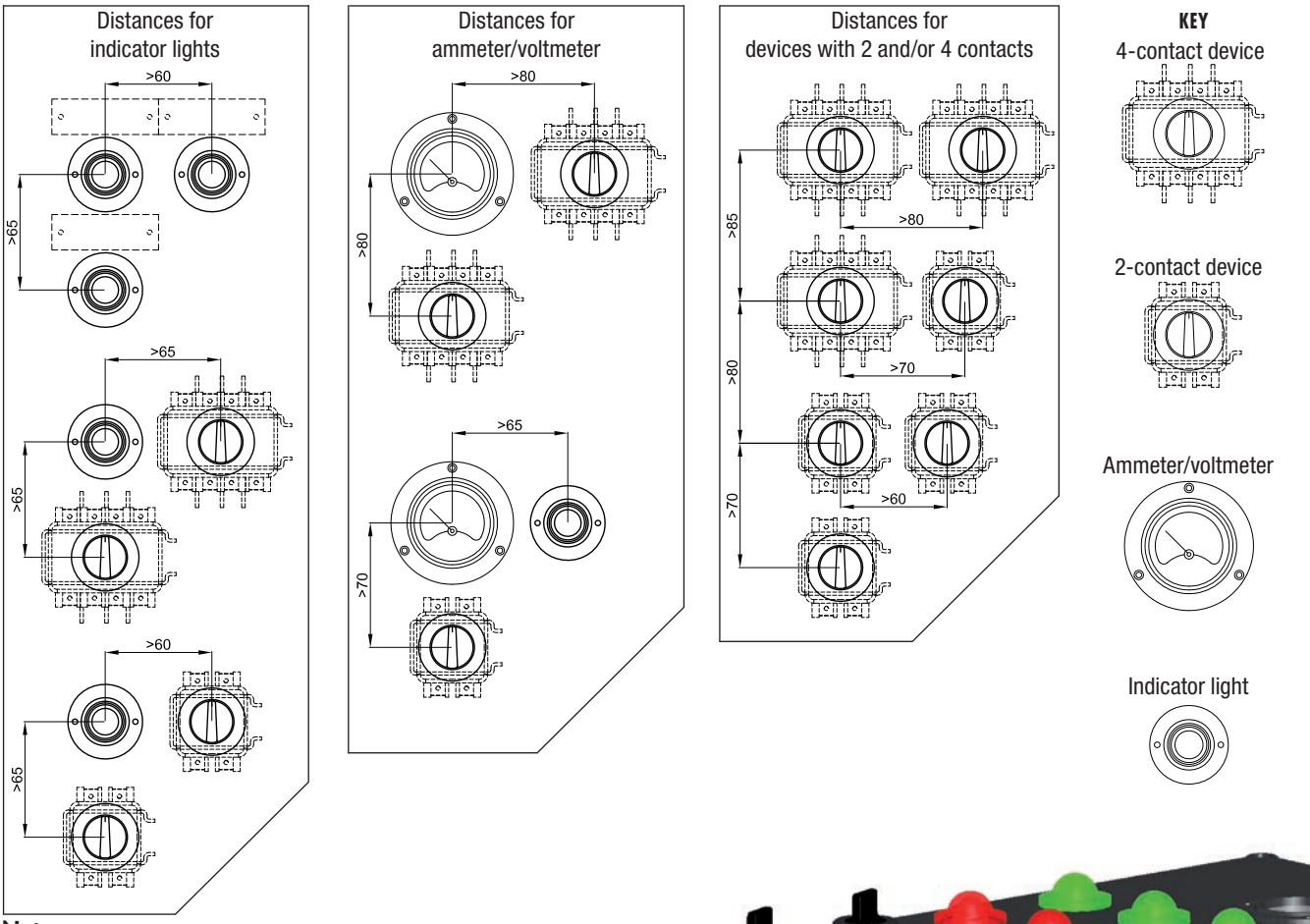

Notes:

Minimum distances between devices worked out for use of standard 60x20 plates.

Option of using up to 4 contacts per device for pushbutton M-0603 and selector M-0604.

Option of using up to 2 contacts per device for emergency stop pushbutton M-0605.
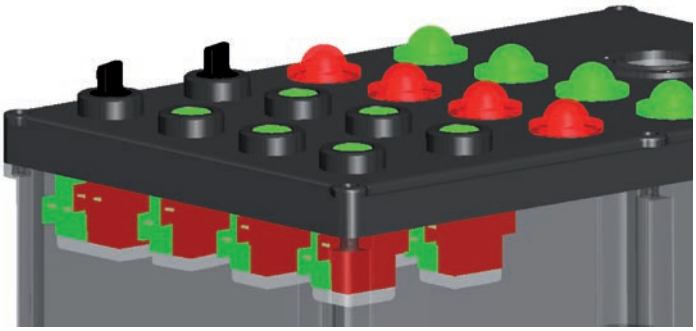
For more information, refer to the Ex e control, monitoring and signalling devices chapter.