M-0

The new Cortem M-0 series control, monitoring and signalling devices are installed as external accessories on 'Ex e' enclosures and boards used in any industrial environment where an explosive atmosphere may be present, classified as Zone 1, 2, 21, 22. M-0 control devices can be used to close or open electrical or mechanical devices fitted inside the 'Ex e' enclosures while the signalling devices feature lights to indicate their operating status. The control and signalling device components are made from stainless steel to deliver unbeatable efficiency under any environmental conditions. Levers are made from aluminium while the plastic parts on push-buttons are designed to provide lengthy service life even when used in a highly corrosive atmosphere. M-0 control and signalling devices have an IP66 protection rating.

Application sectors:

Oil refineries | Chemical and petrochemical plants | Onshore plants | Offshore plants | Low temperatures | Fuel depots | Ships and shipbuilding | 100% Cortem product

CERTIFICATION DATA FOR CONTROL DEVICES M-0603, M-0604 and M-0605

Classification:	Group II	Category 2GD		
Installation: EN 60079.14	zone 1 - zone 2 (Gas)	zone 21 - zone 22 (Dust)		
Marking:	CE 0722 Ex II 2GD Ex e IIC Gb; Ex tb IIIC Db IP66			
Certification:	ATEX CESI 09 ATEX 075U			
	IEC Ex CES 11.0029U	All IEC Ex, TR CU and INMETRO certification data can be downloaded from www.cortemgroup.com		
	INMETRO DNV 17.0138U			
	TR CU AVAILABLE			
Standards:	CENELEC EN 60079-0: 2012, EN 60079-7: 2007, EN 60079-31: 2009 and EUROPEAN DIRECTIVE 2014/34/UE IEC 60079-0: 2007-10, IEC 60079-1: 2008, IEC 60079-7: 2006-07			
Operating temperature:	-40°C +90°C (control and signalling devices are installed together with other certified products)			
Degree of protection:	IP66			

CERTIFICATION DATA FOR CONTACT BLOCK M-0530 and M-0531

Classification:	Group II	Category 2GD		
Installation: EN 60079.14	zone 1 - zone 2 (Gas)			
Marking:	CE 0722 Ex II 2G Ex de IIC Gb			
Certification:	ATEX CESI 09 ATEX 016U			
	IEC Ex CES 11.0031U	All IEC Ex certification data can be downloaded from www.cortemgroup.com		
	TR CU AVAILABLE	All TR CU certification data can be downloaded from www.cortemgroup.com		
Standards:	CENELEC EN 60079-0: 2012, EN 60079-1: 2007, EN 60079-7: 2007 and EUROPEAN DIRECTIVE 2014/34/UE IEC 60079-0: 2007-10, IEC 60079-1: 2007-04, IEC 60079-7: 2006-07			

INDICATOR LIGHT M-0612/3

Classification:	Group II	Category 2GD		
Installation: EN 60079.14	zone 1 - zone 2 (Gas)	zone 21 - zone 22 (Dust)		
Marking:	CE 0722 Ex II 2G Ex db eb IIC Gb; Ex tb IIIC Db IP66			
Certification:	ATEX CESI 00 ATEX 060U			
	IEC Ex CES 11.0030U	All IEC Ex certification data can be downloaded from www.cortemgroup.com		
	TR CU AVAILABLE	All TR CU certification data can be downloaded from www.cortemgroup.com		
Standards:	CENELEC EN 60079-0: 2012+A11:2013, EN 60079-1: 2014, EN 60079-7: 2015, EN 60079-31: 2014 and EUROPEAN DIRECTIVE 2014/34/UE IEC 60079-0: 2011, IEC 60079-1: 2014-06, IEC 60079-31: 2013, IEC 60079-7: 2015			
Degree of protection:	IP66			

AMMETER B-0140A, VOLTMETER B-0140V

Classification:	Group II	Category 2GD		
Installation: EN 60079.14	zone 1 - zone 2 (Gas)	zone 21 - zone 22 (Dust)		
Marking:	CE 0722 Ex II 2G Ex e IIC Gb; II 2D Ex tb IIIC Db IP66			
Certification:	ATEX CESI 04 ATEX 128U			
	IEC Ex CES 12.0022U	All IEC Ex certification data can be downloaded from www.cortemgroup.com		
	TR CU AVAILABLE	All TR CU certification data can be downloaded from www.cortemgroup.com		
Standards:	CENELEC EN 60079-0: 2012, EN 60079-1: 2007, EN 60079-7: 2007, EN 60079-31: 2009 and EUROPEAN DIRECTIVE 2014/34/UE IEC 60079-0: 2011, IEC 60079-31: 2008, IEC 60079-7: 2006-07			
Degree of protection:	IP66			

MECHANICAL FEATURES

Body:	Aluminium with black anodic oxide finish.
Pin and spring:	Stainless steel
Gasket:	Silicone.
Coloured cap on push-button and emergency stop push-button:	Polyamide 6
Selector lever:	Aluminium with black anodic oxide finish
Bolts and screws:	Stainless steel

Control devices can be used to close or open various electrical or mechanical devices fitted inside the enclosures. Relevant technical features are given in detail below.

Push-button **M-0603** features linear push operation.

Push

Selector **M-0604** features twist operation.

Twist

Emergency stop push-button **M-0605** features linear push-to-close operation. To release, twist clockwise and the button automatically returns to its original position.

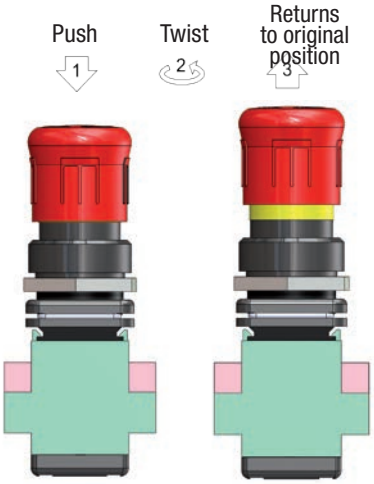

Emergency stop push-button **M-0605/K** features linear push-to-close operation. To release, turn the key clockwise and the button automatically returns to its original position.

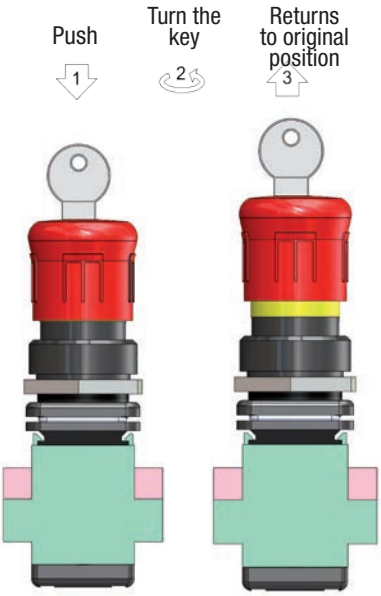

Emergency stop push-button **M-0605/P** features linear push-to-close operation. Pull the push-button to release.

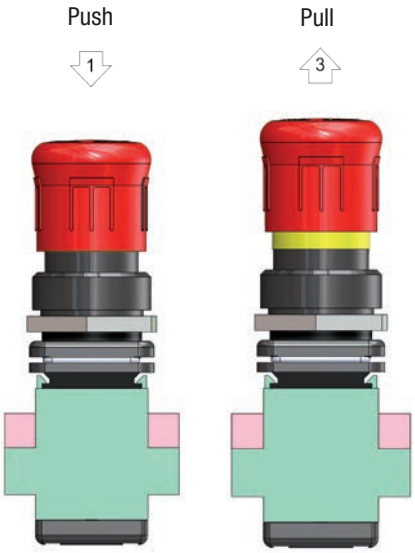

CONTACT FEATURES

Rated voltage: 690 V
Frequency: 50/60 Hz
Capacity: 10 A

Rated operating voltage							
400 V	500 V	690 V	400 V	400 V	400 V	48 V	230 V
Utilization category							
AC-15	AC-15	AC-15	AC-1	AC-2	AC-3	DC-13	DC-13
Rated operating currents							
10 A	4 A	2 A	16 A	6 A	2,4 A	10 A	0,5 A

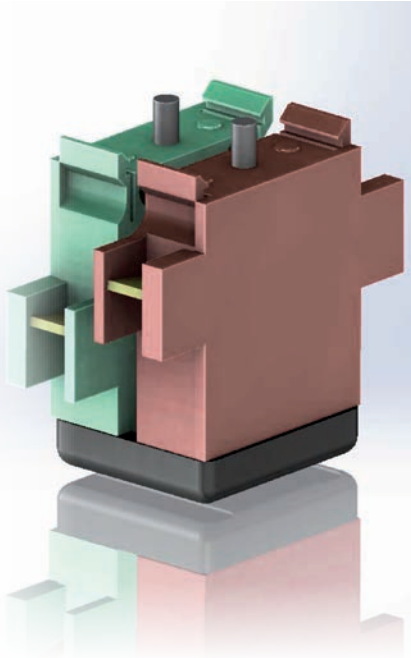

Connection: max. 2.5 mm^2
Rated impulse withstand voltage: 4 kV
Pollution degree: 2
Conditional short-circuit current: 1kA
Maximumuse of short-circuit protection devices: one 10A 500V gG fuse on each conductor
Minimum travel for positive opening: 3 mm
Minimum actuation force required to achieve positive opening of all opening contacts: 5 N
Maximum travel (+ overtravel): 4.75 Hz
Body: Polyamide
Contacts: Brass
Pins, springs and screws: Stainless steel
Weight: 40 g

The new slot-in adapter system makes light work of fitting contacts in control panels with walls up to 7 mm thick. In addition, with the mushroom-head push-button having a smaller diameter thread (M32x1.5), the lid can accommodate a larger number of control and signalling devices than with the previous version.

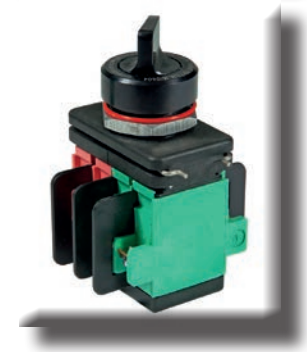

Option of using up to 4 contacts per device for push-button M-0603 and selector M-0604. Option of using up to 2 contacts per device for emergency stop push-button M-0605.

ACCESSORIES AVAILABLE ON REQUEST/ SPECIAL REQUESTS

Padlocking system for selector (codes **M-962** and **M-963**)
Padlocking system for push-button (code M-0603/..**L**)
Padlocking for mushroom-head push-button (code **M-0615**)
Black mushroom-head push-button (code M-0605**/N**)
Earthing ring for installing control and signalling devices on polyester lids (code **A331IB**)

Push-button M-0603

Range of push-buttons designed to allow installation of a high number of lid-mounted control and signalling devices. Available with caps made from polyamide 6 in different colours and in padlockable version. Option, for all control and signalling devices, of attaching nameplates on the lid with size and wording produced to customer specifications.

CODE	DESCRIPTION	NOTES
M-0603/N	Black Ex e push-button without contacts	Add the required contact assembly
M-0603/NL	Padlockable black Ex e push-button without contacts	Add the required contact assembly
M-0603/R	Red Ex e push-button without contacts	Add the required contact assembly
M-0603/RL	Padlockable red Ex e push-button without contacts	Add the required contact assembly
M-0603/V	Green Ex e push-button without contacts	Add the required contact assembly
M-0603/G	Yellow Ex e push-button without contacts	Add the required contact assembly
M-0603/B	Blue Ex e push-button without contacts	Add the required contact assembly
M-0603/BI	White Ex e push-button without contacts	Add the required contact assembly
M-0606/10	1NO contact assembly	
M-0606/01	1NC contact assembly	
M-0606/11	1NO+1NC contact assembly	
M-0606/20	2NO contact assembly	
M-0606/02	2NC contact assembly	

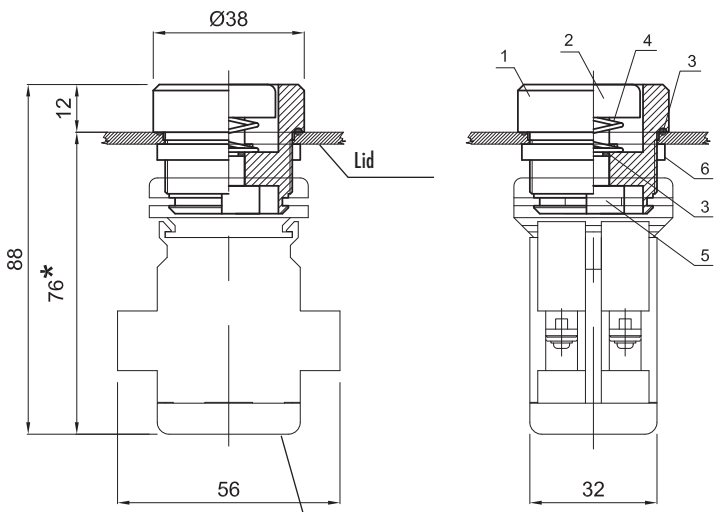

Front part of switch M-0603 comprising:
1. body
2. coloured cap
3. O-ring
4. spring
5. moving part
6. lock nut

M-0530 and/or M-0531 contact block
Marking Ex II 2G Ex de IIC (CESI 09 ATEX 016U)

* with 4 contacts height: 79 mm

Hole drilling arrangement (minimum distances)

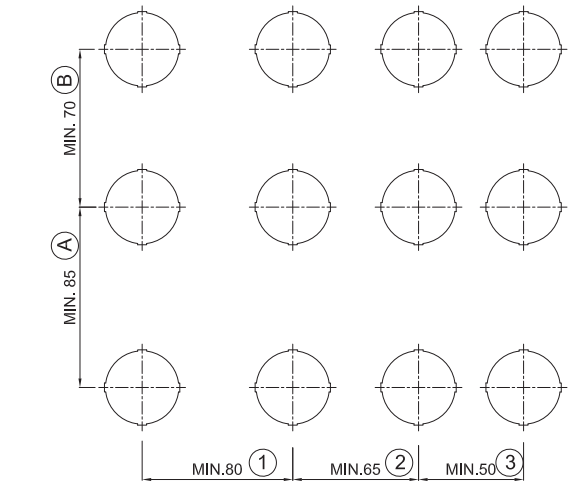

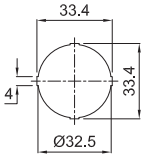

1) device with 4 contacts - device with 4 contacts
2) device with 4 contacts - device with 2 contacts
3) device with 2 contacts - device with 2 contacts

A) device with 4 contacts - device with 4 contacts
B) device with 2 contacts - device with 2 contacts

Selector M-0604

CODE	DESCRIPTION	NOTES
M-0604/X	Ex e selector X arrangement	Selector complete with contacts
M-0604/R	Ex e selector R arrangement	Selector complete with contacts
M-0604/RSX	Ex e selector R left-hand arrangement	Selector complete with contacts
M-0604/1Z	Ex e selector 1Z arrangement	Selector complete with contacts
M-0604/2Z	Ex e selector 2Z arrangement	Selector complete with contacts
M-0604/1I	Ex e selector 1I arrangement	Selector complete with contacts
M-0604/2I	Ex e selector 2I arrangement	Selector complete with contacts
M-0604/3I	Ex e selector 3I arrangement	Selector complete with contacts
M-0604/4I	Ex e selector 4I arrangement	Selector complete with contacts
M-0604/1C	Ex e selector 1C arrangement	Selector complete with contacts
M-0604/2C	Ex e selector 2C arrangement	Selector complete with contacts
M-0604/1W	Ex e selector 1W arrangement	Selector complete with contacts
M-0604/2W	Ex e selector 2W arrangement	Selector complete with contacts
M-0604/1M	Ex e selector 1M arrangement	Selector complete with contacts
M-0606/11	1NO+1NC contact assembly	Replacement part for arrangements: X - R - 1Z - RSX
M-0606/22	2NO+2NC contact assembly	Replacement part for arrangements: 2Z
M-0606/10	1NO contact assembly	Replacement part for arrangements: 1I - 1M
M-0606/20	2NO contact assembly	Replacement part for arrangements: 2I - 2M - 1C - 1W
M-0606/30	3NO contact assembly	Replacement part for arrangements: 3I - 3M
M-0606/40	4NO contact assembly	Replacement part for arrangements: 4I - 4M - 2C - 2W

Selector complete with 2 or 4 contacts, available with different wiring arrangements for connections inside board or on machine. Option of padlocking and earthing.

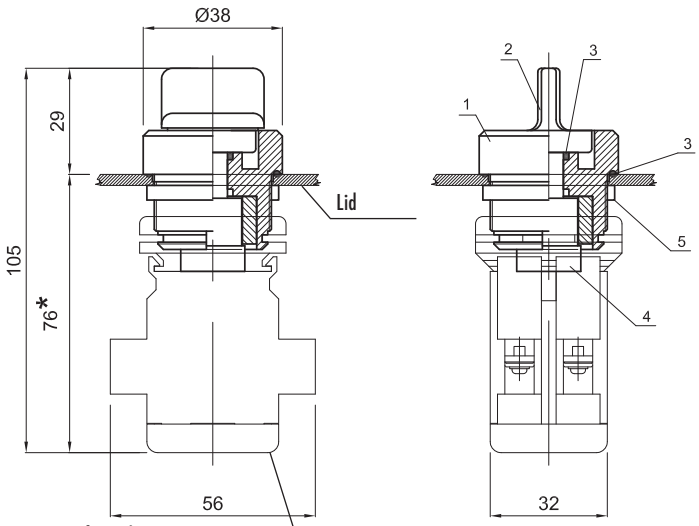

Front part of switch M-0604 comprising:
1. body
2. lever
3. O-ring
4. moving part
5. lock nut

M-0530 and/or M-0531 contact block
Marking Ex II 2G Ex de IIC (CESI 09 ATEX 016U)

* with 4 contacts height: 79 mm

Hole drilling arrangement (minimum distances)

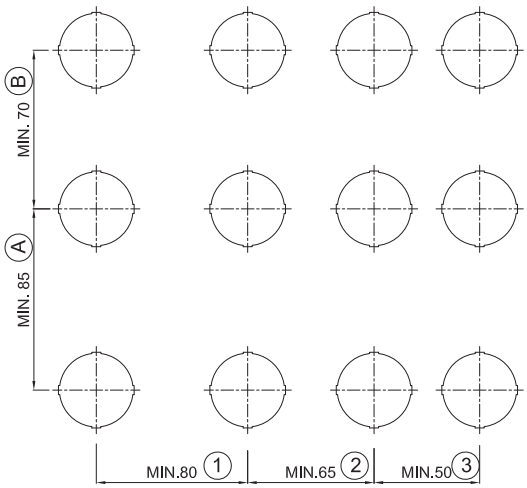

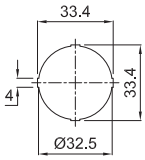

1) device with 4 contacts - device with 4 contacts
2) device with 4 contacts - device with 2 contacts
3) device with 2 contacts - device with 2 contacts

A) device with 4 contacts - device with 4 contacts
B) device with 2 contacts - device with 2 contacts

Emergency stop push-button M-0605

The emergency stop push-button allows operators to stop machinery safely by pushing the button. Model M-0605/K comes with 2 keys, allowing you to lock the push-button in place.

CODE	DESCRIPTION	NOTES
M-0605	Ex e emergency stop push-button with release without contacts	You will need to add required contact assembly
M-0605/K	Ex e emergency stop push-button with key release without contacts	You will need to add required contact assembly
M-0605/P	Ex e push-pull, stop push-button without contacts	You will need to add required contact assembly
M-0606/10	1NO contact assembly	
M-0606/01	1NC contact assembly	
M-0606/11	1NO+1NC contact assembly	
M-0606/20	2NO contact assembly	
M-0606/02	2NC contact assembly	

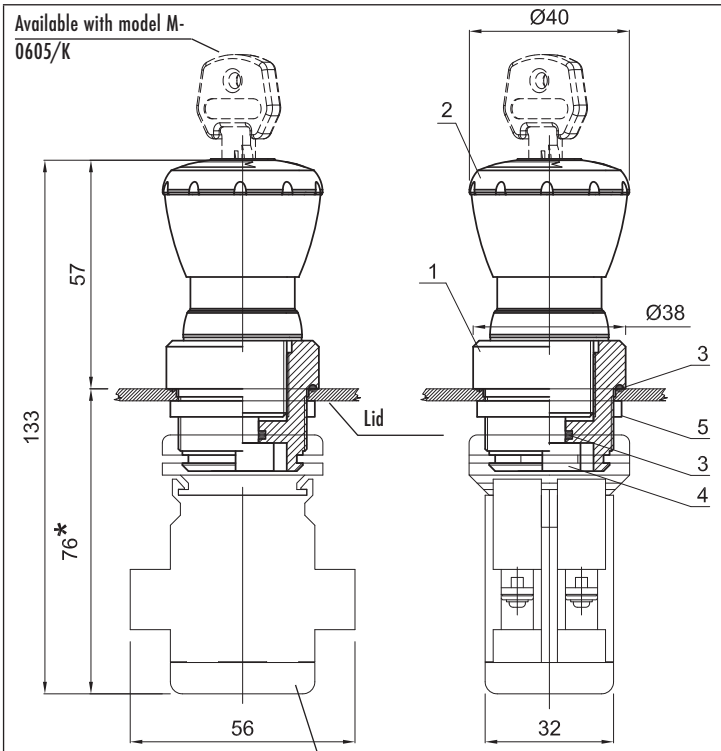

Hole drilling arrangement (minimum distances)

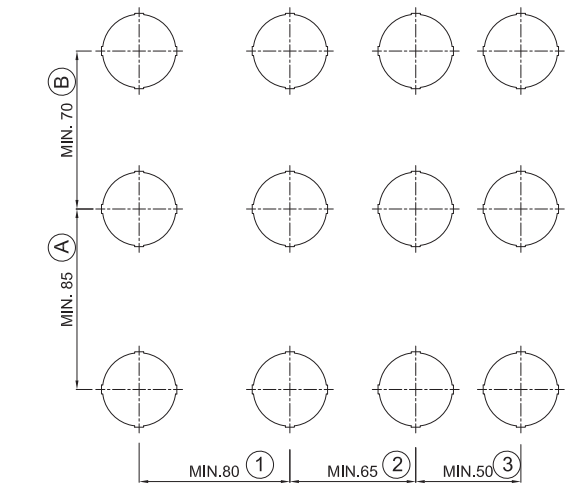

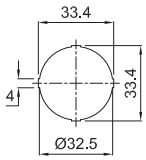

1) device with 4 contacts - device with 4 contacts
2) device with 4 contacts - device with 2 contacts
3) device with 2 contacts - device with 2 contacts

A) device with 4 contacts - device with 4 contacts
B) device with 2 contacts - device with 2 contacts

* Standard drilling layout.
Option of using up to 2 contacts per device for emergency stop push-button M-0605.

Multi-LED indicator M-0612/3

CODE	DESCRIPTION	NOTES
M-0612/3B110	Blue multi-LED indicator 110Vac/dc	
M-0612/3B12	Blue multi-LED indicator 12Vac/dc	
M-0612/3B230	Blue multi-LED indicator 230Vac	
M-0612/3B24	Blue multi-LED indicator 24Vac/dc	
M-0612/3G110	Yellow multi-LED indicator 110Vac/dc	
M-0612/3G12	Yellow multi-LED indicator 12Vac/dc	
M-0612/3G230	Yellow multi-LED indicator 230Vac	
M-0612/3G24	Yellow multi-LED indicator 24Vac/dc	
M-0612/3I110	Colourless multi-LED indicator 110Vac/dc	
M-0612/3I12	Colourless multi-LED indicator 12Vac/dc	
M-0612/3I230	Colourless multi-LED indicator 230Vac	
M-0612/3I24	Colourless multi-LED indicator 24Vac/dc	
M-0612/3R110	Red multi-LED indicator 110Vac/dc	
M-0612/3R12	Red multi-LED indicator 12Vac/dc	
M-0612/3R230	Red multi-LED indicator 230Vac	
M-0612/3R24	Red multi-LED indicator 24Vac/dc	
M-0612/3V110	Green multi-LED indicator 110Vac/dc	
M-0612/3V12	Green multi-LED indicator 12Vac/dc	
M-0612/3V230	Green multi-LED indicator 230Vac	
M-0612/3V24	Green multi-LED indicator 24Vac/dc	

Multi-LED indicators come with lenses in different colours and different voltage options. Easy to install and wire, offering lasting reliability with a LED service life of 50,000 hours.

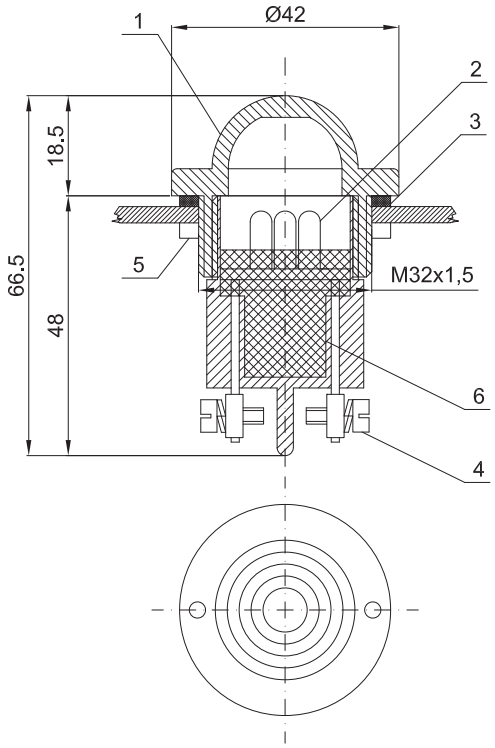

Hole drilling arrangement (minimum distances)

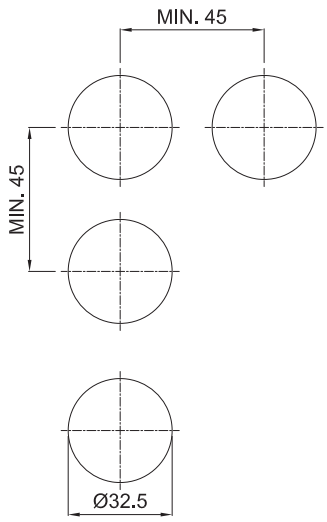

Ammeter B-0140A, voltmeter B-0140V

CODE	DESCRIPTION	NOTES
B-0140A	Ammeter	*
B-0140V	Voltmeter	

The Cortem certified ammeter and voltmeter are suitable for measuring electrical values when the situation demands the utmost accuracy. The internal faces featuring the measuring range scale are produced to the customer's specifications.

Maximum voltage:	600 V
Rated frequency:	40 / 60 Hz
Accuracy class:	1.5
Power dissipation:	1.1 VA (B-0140A) 3.0 VA (B-0140V)

Measuring range - Direct measurement:	0 - 40 mA	0 - 0.1 A
	0 - 60 mA	0 - 1.5 A
	0 - 100 mA	0 - 2.5 A
	0 - 250 mA	0 - 5 A
	0 - 400 mA	0 - 6 A
	0 - 600 mA	0 - 15 A
Measuring range - With current transformer:	0 - 2.5 mA	0 - 50 A
	0 - 5 mA	0 - 60 A
	0 - 10 mA	0 - 75 A
	0 - 15 mA	0 - 100 A
	0 - 20 mA	0 - 150 A
	0 - 25 mA	0 - 200 A
	0 - 30 mA	0 - 300 A
	0 - 40 mA	0 - 400 A

* For the ammeter mod. B-0140A4 (4-20mA), the impedance is 1200 Ω. In the case that the driver was not compatible with this impedance, we strongly recommend to use the transducer provided by Cortem mod. NI-DT1.

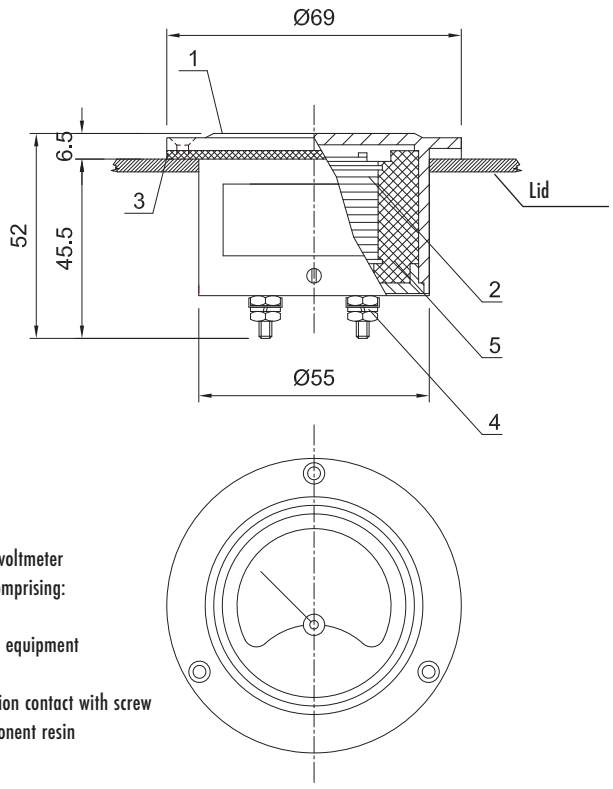

Ammeter/voltmeter
M-0140 comprising:
1. body
2. internal equipment
3. gasket
4. connection contact with screw
5. 2-component resin

Hole drilling arrangement (minimum distances)

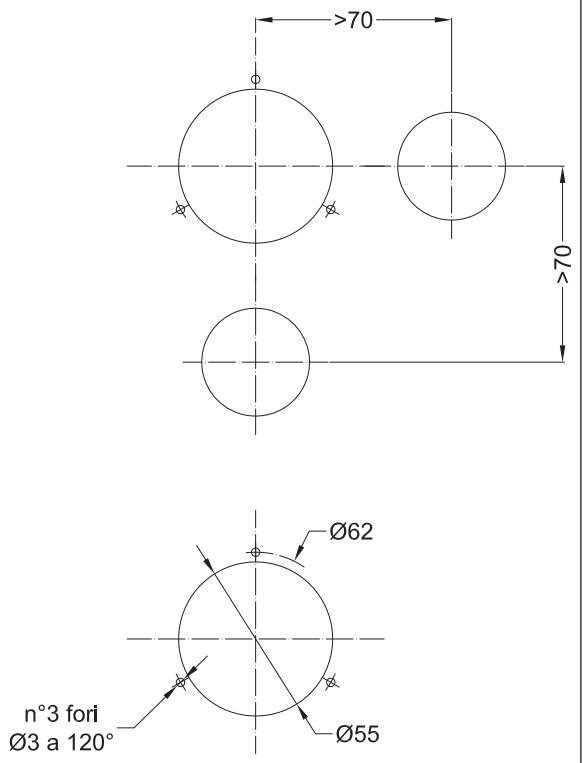

TABLE ILLUSTRATING MAIN WIRING ARRANGEMENTS

Push-button w/ NC contact	Push-button w/ NO contact	Mushroom-head push-button with NC twist release
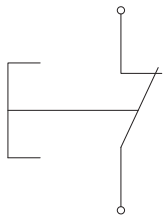	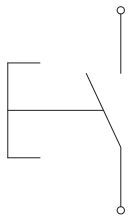	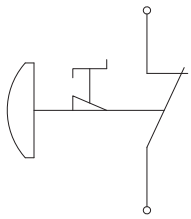

Code	Selector		
X	3-position control with spring return to B from both A and C	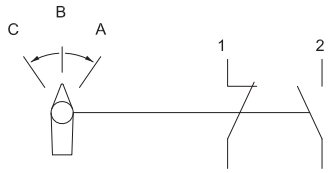	
R	3-position control with spring return from both A and B and maintained C	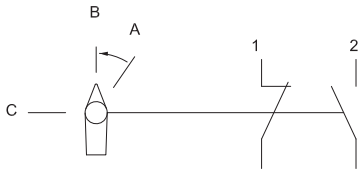	
RSX	3-position control with spring return from both A and B and maintained C	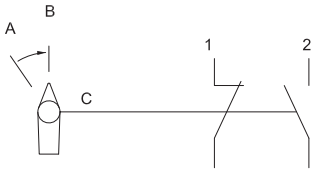	
Z	2-position control maintained	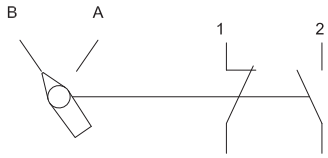	
I	Control switch	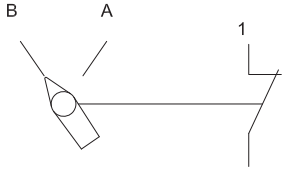	
C	3-position control maintained	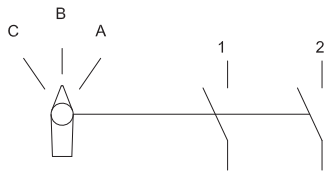	
W	3-position control with spring return to B from both A and C	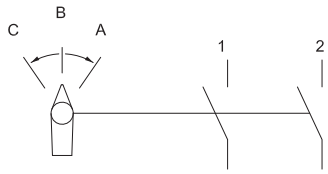	
M	Control with spring return	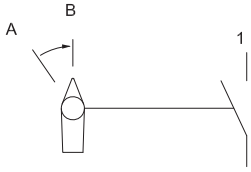	

	1	2
A	CLOSED	CLOSED
B	CLOSED	OPEN
C	OPEN	OPEN

	1	2
A	CLOSED	CLOSED
B	CLOSED	OPEN
C	OPEN	OPEN

	1	2
A	CLOSED	CLOSED
B	CLOSED	OPEN
C	OPEN	OPEN

	1	2
A	OPEN	CLOSED
B	CLOSED	OPEN

	1
A	OPEN
B	CLOSED

	1	2
A	CLOSED	OPEN
B	OPEN	OPEN
C	OPEN	CLOSED

	1	2
A	CLOSED	OPEN
B	OPEN	OPEN
C	OPEN	CLOSED

	1
A	CLOSED
B	OPEN

PROTECTION AND PADLOCKING SYSTEMS FOR CONTROL AND SIGNALLING DEVICES, ACCESSORIES AND SPECIAL VERSIONS

Padlocking system for selector
(codes **M-962** and **M-963**)

System protecting against accidental operation for mushroom-head push-buttons. Code **M-988**

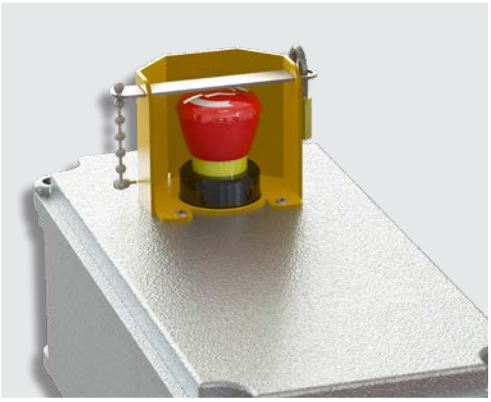

Assembly comprising stainless steel padlocking bar and chain for fastening. ***M-0615/1***

Padlocking system for push-button
(code M-0603/..**L**)

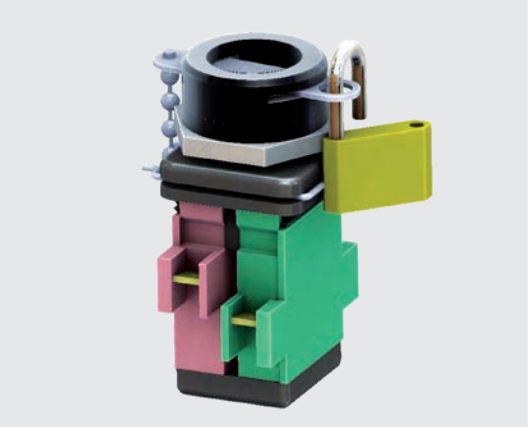

Padlocking protection
(code **M-0631**)

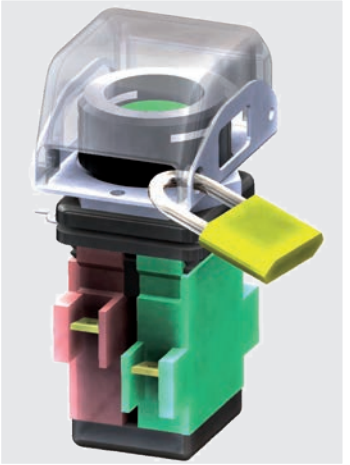

Earthing ring for installing control and signalling devices on polyester lids
(code **A331IB**)

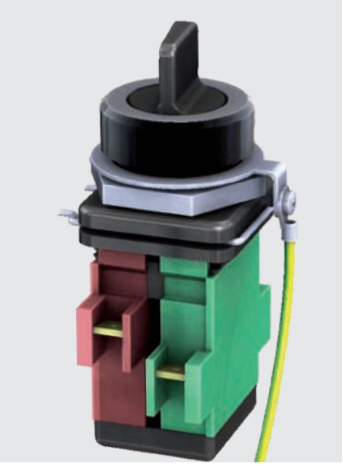

Black mushroom-head push-button
(code M-0605**/N**)

EXAMPLES OF APPLICATION

SA302318 Cortem aluminium enclosure complete with:

1 x ammeter B-0140A

1 x red indicator light M-0612/3R230

1 x green indicator light M-0612/3V230

2 x selectors M-0604/1Z

1 x NEV32IB cable gland

11 x CBD2 terminals

1 x earth terminal TE60

1 x internal mounting plate B32-229

Outer coating RAL 7035

SA473018SS Cortem stainless steel enclosure complete with:

1 x ammeter B-0140A

1 x emergency stop push-button with key release M-0605/K

1 x black padlockable push-button M-0603/NL

1 x yellow indicator light M-0612/3G230

1 x green indicator light M-0612/3V230

2 x selectors M-0604/1C

6 x NEV25IB cable glands

1 x internal mounting plate B47-357