ELFiT®

ELectrical FITtings for Hazardous Areas

Weather proof series

CS… CSG… series junction boxes are made from aluminium alloy and given an electrostatically applied epoxy coating containing stainless steel particles that is then baked at 200°C. This treatment ensures good UV as well as thermal stability, providing mechanical impact resistance and excellent resistance when exposed either to salt mist or to marine and other damp environments. CS and CSG series junction boxes are usually installed in industrial plants and they are mainly used as junction boxes and/or for routing cables to control rooms for analogue or digital signals and for control, monitoring and signalling associated with equipment such as motors, pumps...etc., or for giving physical readings such as flow rate, level, temperature, pressure, etc.... The thickness of its walls (7mm) means the CSG series is suitable for direct connection with pipes and fittings featuring tapered threads. Upon customer's request threaded hubs or bushings, complete with cable glands, plugs and other accessories, can be made.

Standard construction:	Low copper content aluminium alloy. Stainless steel screws and bolts. Silicone gasket. Internal/external earth screws. Fixing lugs. RAL 7035 polyester coating.
Protection degree:	IP 66
Mechanical strenght:	IK10
Standards:	IEC 60529

ALUMINIUM ENCLOSURES SELECTION CHART

Code	Outside dimensions			Fixing				Weight
	A	B	C	X	Y	X1	ØD	Kg
CS090907	90	90	73	74	74	-	6,5	0,40
CS111108	110	110	83	94	94	-	6,5	0,50
CSG111108	110	110	83	94	94	-	6,5	0,75
CS171108	170	110	83	154	94	-	6,5	0,80
CSG171108	170	110	83	154	94	-	6,5	1,55
CS141410	147	147	100	131	131	-	6,5	0,80
CSG141410	147	147	100	131	131	-	6,5	1,40
CS202012	200	200	120	180	180	-	6,5	1,70
CS301410	305	147	110	285	127	-	6,5	2,00
CSG301410	305	147	110	285	127	-	6,5	2,70
CS302310	305	230	110	285	210	-	6,5	2,80
CSG302310	305	230	100	285	210	-	6,5	3,40
CS302318	305	230	190	285	210	-	6,5	3,50
CSG302318	305	230	190	285	210	-	6,5	5,30
CS473018	475	305	195	450	285	225	6,5	6,50
CSG473018	475	305	195	450	285	225	6,5	8,90
CSG623018	625	305	195	605	285	302,5	6,5	11,3
CSG606018	600	600	205	580	580	290	6,5	27,0

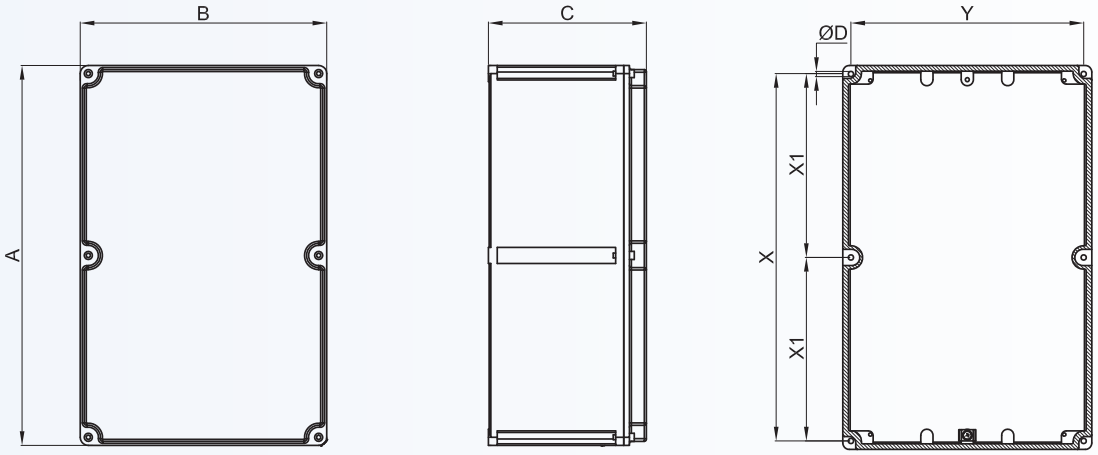

CORTEM GROUP®
ED.2021
vendite@elfit.com info@elfit.com
www.elfit.com

ACCESSORIES UPON REQUEST

ILLUSTRATION	DESCRIPTION	MODEL	SIZE A	SIZE B	CODE
	Internal mounting plates Thickness 25/10 Aluminium Galvanized steel (B...-229AC) Stainless steel (B...-229IN)	CS090907	82	48	**B09-229**
		CSG090907	73	48	**B09-229P**
		CS111108	100	68	**B11-229**
		CSG111108	92	68	**B11-229P**
		CS141410	137	105	**B14-229**
		CSG141410	129	105	**B14-229P**
		CS171108	159	67	**B17-229**
		CS202012	186	146	**B20-229**
		CS/CSG301410	285	97	**B31-229**
		CS/CSG302310 CS/CSG302318	285	180	**B32-229**
		CS/CSG473018	453	254	**B43-229**
		CS/CSG623018	603	249	**B63-229**
		CSG606018	532	532	**B60-229**

ILLUSTRATION	DESCRIPTION	MODEL	CHARACTERISTICS	CODE
	Drain and breather valve	Thread ISO M20 or ISO M25	Material: stainless steel	**ECDE-...S**
	Entry blanking plugs and cable glands	For models and codes, see cable glands and electrical fittings chapter		
	Hinges (2 per enclosure)	Low lid enclosures	Material: stainless steel	**B-0105**
		High lid enclosures		**B-0106**
	Hinges (2 per enclosure)	SAG606018	Material: stainless steel	**K-0351**

CS and CSG series enclosures

Models from CS...series (lightweight series)
Thinner walls
The body can only accommodate through holes with no threading

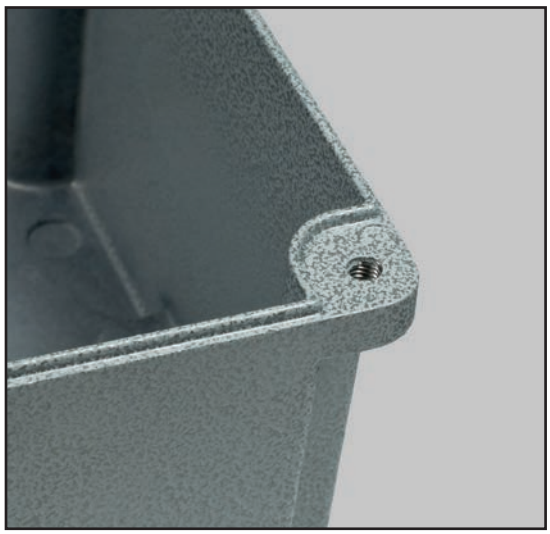

Models from CSG...series (heavy-duty series)
Extra-thick walls
The body can also accommodate threaded holes

CS/P series junction boxes are made from fibreglass-reinforced polyester. Because they are highly resistant to contamination from fuel oils and mechanical shock, in addition to being lightweight and practical, they can be installed in all industrial plants. The enclosures have special holes made in the base for easy wall mounting.
The lid features a silicone gasket that is resistant to low and high temperatures and comes complete with AISI 304 stainless steel screws, which are arranged around the outside of the lid to ensure a tight seal with the IP66 rating. CS/P series enclosures are mainly used as junction boxes for routing cables for analogue or digital signals and/or for control and monitoring associated with equipment such as motors, fans, pumps and/or for giving physical readings such as flow rate, level, pressure, temperature, current, etc..

Standard construction:	GRP (glass reinforced polyester resin) in RAL 9017 black coating. Stainless steel screws and bolts. Silicone gasket. Fixing lugs.
Protection degree:	IP 66
Mechanical strenght:	IK10
Standards:	IEC 60529

POLYESTER ENCLOSURES SELECTION CHART

Code	Outside dimension			Fixing				Weight
	A	B	C	X	Y	X1	ØD	Kg
CS090907/P	90	90	73	74	74	-	6,5	0,30
CS111108/P	110	110	83	94	94	-	6,5	0,40
CS171108/P	170	110	83	154	94	-	6,5	0,80
CS141410/P	147	147	100	131	131	-	6,5	1,00
CS301410/P	305	147	110	285	127	-	6,5	1,90
CS302310/P	305	230	110	285	210	-	6,5	2,50
CS302318/P	305	230	190	285	210	-	6,5	3,10
CS473018/P	470	305	195	450	285	225	6,5	4,70
CS623018/P	620	305	185	560	285	260-300	8	6,30

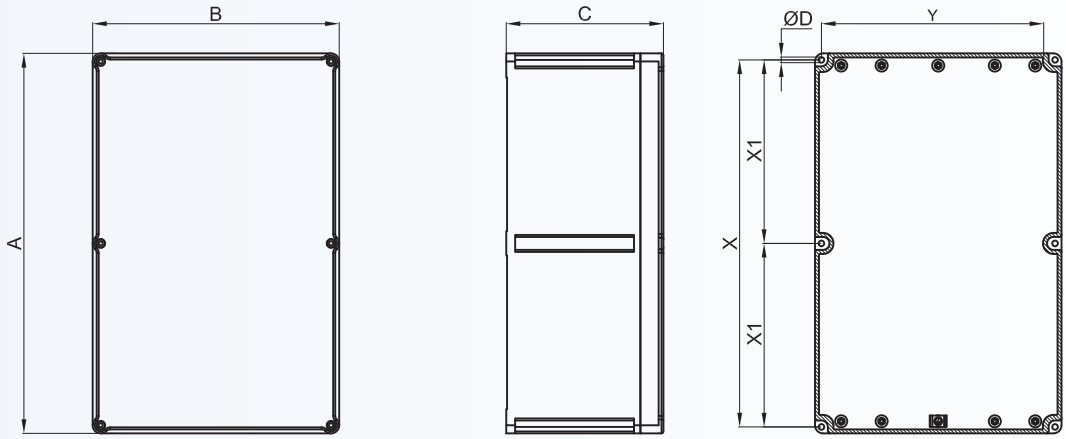

CORTEM GROUP®
ED.2021
vendite@elfit.com info@elfit.com
www.elfit.com

ACCESSORIES UPON REQUEST

ILLUSTRATION	DESCRIPTION	MODEL	SIZE A	SIZE B	CODE
	Internal mounting plates Thickness 2.5mm Aluminium Galvanized steel (B...-229AC) Stainless steel (B...-229IN)	CS090907/P	82	48	**B09-229**
		CS111108/P	100	68	**B11-229**
		CS141410/P	137	105	**B14-229**
		CS171108/P	159	67	**B17-229**
		CS301410/P	285	97	**B31-229**
		CS302310/P CS302318/P	285	180	**B32-229**
		CS473018/P	453	254	**B43-229**
		CS623018/P	603	249	**B63-229**

ILLUSTRATION	DESCRIPTION	MODEL	CHARACTERISTICS	CODE
	Drain and breather valve	Thread ISO M20 or ISO M25	Material: stainless steel	**ECDE-...S**
	Entry blanking plugs and cable glands	For models and codes, see cable glands and electrical fittings chapter		
	Hinges (2 per enclosure)	Low lid enclosures	Material: stainless steel	**B-0105**
		High lid enclosures		**B-0106**
	Through earth connection	M8	Material: stainless steel	**K-0307/1**
		M6		**K-0307/2**
	Brass continuity plates for earthing	For models and codes see the following scheme		**B-...**

CONTINUITY PLATES

	Continuity plate for all four enclosure sides	Continuity plate for single enclosure side	
	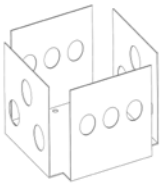	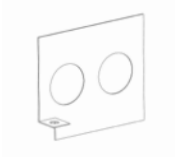	
Enclosure	Plate code	Plate code: Long side	Plate code: Short side
SA090907/P	B-388	B-455	
SA111108/P	B-389	B-456	
SA141410/P	B-390	B-457	
SA171108/P	B-391	B-458	B-456
SA301410/P	B-392	B-459	B-457
SA302310/P	B-393	B-459	B-460
SA302318/P	B-394	B-461	B-462
SA473018/P	B-395	(2x) B-462	B-461
SA623018/P	-	(2x) B-463	B-463

CS/SS series watertight junction boxes, in stainless steel, are suitable for containing any electrical and electronic equipment.
Thanks to the material used and their features, they are particularly indicated for industrial environments with strongly aggressive atmospheres.

Standard construction:	Stainless steel AISI 316L Stainless steel bolts and screws Silicone gasket Fixing lugs
Protection degree:	IP 66
Mechanical strenght:	IK10
Standards:	IEC 60529

STAINLESS STEEL ENCLOSURES SELECTION CHART

Codice	External dimensions			Fixing		Weight
	A	B	C	a1	b1	Kg
CS111108SS	110	110	90	38	130	0,80
CS141410SS	147	147	110	75	167	1,40
CS171108SS	170	110	90	98	130	1,20
CS301410SS	305	147	110	233	167	2,50
CS302310SS	305	230	110	233	250	4,30
CS302318SS	305	230	190	233	250	5,60
CS404020SS	400	400	210	328	420	10,90
CS473018SS	470	305	190	398	325	8,00
CS623018SS	620	305	190	548	325	12,00
CS606020SS	600	600	210	528	620	16,00

Other dimensions can be enquired.

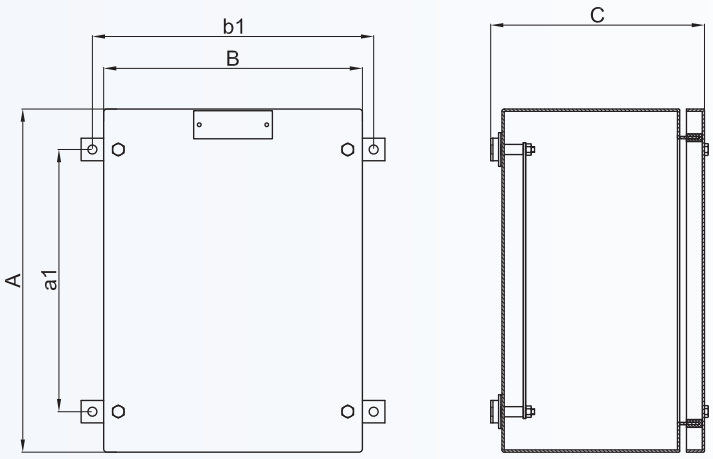

CORTEM GROUP®
ED.2021
vendite@elfit.com info@elfit.com
www.elfit.com

ACCESSORIES UPON REQUEST

ILLUSTRATION	DESCRIPTION	MODEL	SIZE A	SIZE B	CODE
	Internal mounting plates Stainless steel	CS111108SS	50	50	**B11-357**
		CS141410SS	87	87	**B14-357**
		CS171108SS	110	50	**B17-357**
		CS301410SS	245	87	**B301-357**
		CS302310SS CS302318SS	245	170	**B302-357**
		CS404020SS	340	340	**B40-357**
		CS473018SS	410	245	**B47-357**
		CS623018SS	560	245	**B62-357**
		CS606020SS	540	540	**B603-357**

ILLUSTRATION	DESCRIPTION	MODEL	CHARACTERISTICS	CODE
	Drain and breather valve	Thread ISO M20 or ISO M25	Material: stainless steel	**ECDE-...S**
	Entry blanking plugs and cable glands	For models and codes, see cable glands and electrical fittings chapter		

SPECIAL REQUEST

CS-...SSF... Junction box with walls with gland plates
CS-...SSC... Junction box with cover fixing by lock system
CS-...SSCF... Junction box with walls with gland plates and cover fixing by lock system

LOCK SYSTEM

Code example

1) CS302318SSC
Stainless steel junction box 305x230x190 with cover fixing by lock system

CS...SSF.. SERIES ENCLOSURES WITH REMOVABLE GLAND PLATES

Removable gland plate position coding

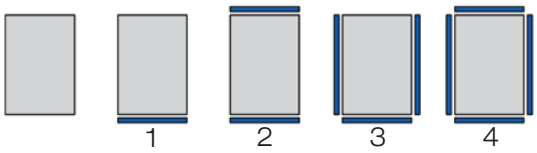

Code example

1) CS302318SSF3
Stainless steel junction box 305x230x190 with 3 removable gland plates

2) CS473018SSF1
Stainless steel junction box 470x305x190 with 1 removable gland plate

Code	SIZE REMOVABLE GLAND PLATES			
	Side A	Side B	Side C	Side D
CS302318SSF..	130x100	225x100	150x100	225x100
CS404020SSF..	300x120	320x120	320x120	320x120
CS473018SSF..	205x100	390x100	225x100	390x100
CS623018SSF..	205x100	540x100	225x100	540x100
CS606020SSF..	500x120	520x120	520x120	520x120

Economic junction boxes, are used as pulling or junction boxes in areas where there is no danger of explosion, but it is required a specific protection to prevent the entry of solids and liquids. They are stainless steel made and can be installed in chemical and off-shore plants and where is a strong external agents'aggression. Upon specific request they can be supplied with terminal blocks and copper rods for earth connections. Upon customer request threaded hubs or bushings, complete with cable glands, plugs and other accessories both on the enclosure's side and on specific removable flanges, can be made.

Standard construction:	Stainless steel AISI 316L Stainless steel bolts and screws Silicone gasket Fixing lugs
Degree of protection:	IP 66
Mechanical strenght:	IK10
Standards:	IEC 60529

STAINLESS STEEL ENCLOSURES SELECTION CHART

Code	Outside dimensions			Fixing			Weight
	A	B	C	X	Y	ØD	Kg
CTBEW121208	120	120	90	135	42	A	
CTBEW151208	150	120	90	135	73	A	
CTBEW151509	150	150	100	165	73	A	
CTBEW191509	190	150	100	165	113	A	
CTBEW191910	190	190	100	165	73	A	
CTBEW221513	229	152	140	205	113	A	
CTBEW262610	258	258	110	273	181	B	
CTBEW262616	258	258	170	273	181	B	
CTBEW262620	258	258	210	273	181	B	
CTBEW301410	306	146	110	160	228	B	
CTBEW302310	306	236	110	250	228	B	
CTBEW303010	306	306	110	320	228	B	
CTBEW303016	306	306	170	320	228	B	
CTBEW303020	306	306	210	320	228	B	
CTBEW381612	380	160	130	175	303	B	
CTBEW382610	380	260	110	275	303	B	
CTBEW382616	380	260	170	275	303	B	
CTBEW382620	380	260	210	275	303	B	
CTBEW402513	400	250	140	265	323	B	

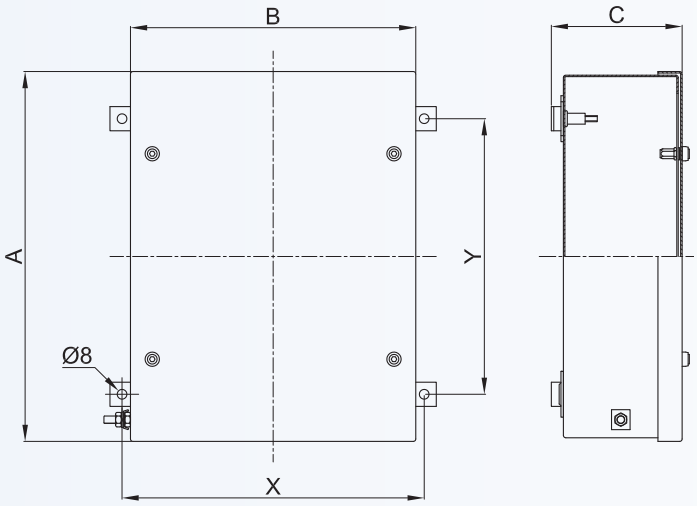

Type

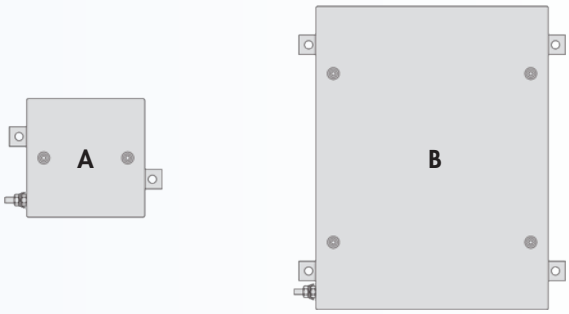

ACCESSORIES UPON REQUEST

ILLUSTRATION	DESCRIPTION	MODEL	SIZE A	SIZE B	CODE
	Internal mounting plates Stainless steel	CTBEW121208	60	60	**B12-484**
		CTBEW151509	90	90	**B15-484**
		CTBEW191910	130	130	**B19-484**
		CTBEW221513	170	90	**B22-484**
		CTBEW262610 CTBEW262616 CTBEW262620	200	200	**B26-484**
		CTBEW301410	245	85	**B303-484**
		CTBEW302310	145	175	**B302-484**
		CTBEW303010 CTBEW303016 CTBEW303020	245	245	**B30-484**
		CTBEW382610 CTBEW382616 CTBEW382620	320	200	**B38-484**

ILLUSTRATION	DESCRIPTION	MODEL	CHARACTERISTICS	CODE
	Entry blanking plugs and cable glands	For models and codes, see cable glands and electrical fittings chapter		
	Drain and breather valve	Thread ISO M20 or ISO M25	Material: stainless steel	**ECDE-...S**

INSTALLATION EXAMPLE OF INSIDE TERMINAL BLOCKS

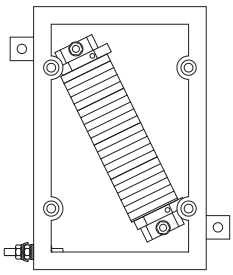

Diagonally and directly installed on internal inserts for greater amount of terminal blocks on small enclosures

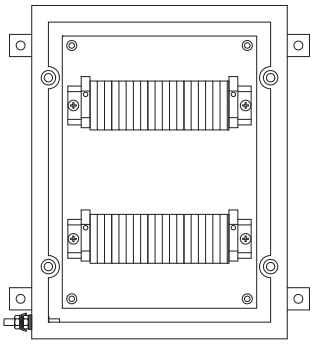

Horizontally or vertically, installed on mounting plate in order to minimize oscillations of terminal block in case of external vibrations

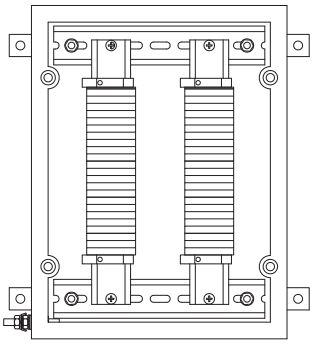

Vertically installed on DIN guides for greater cheapness

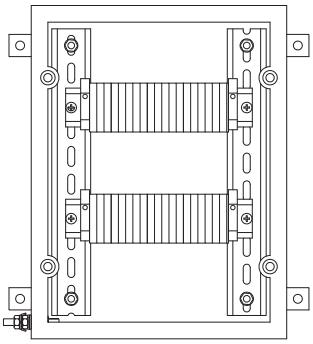

Horizontally installed on DIN guides for greater cheapness

Condulet are used as pulling or junction boxes in areas where is no danger of explosion, but it is required a specific protection to prevent the entry of solids and liquids. They are aluminium made and can be installed in chemical and off-shore plants and where is a strong external agents aggression.

Standard construction:	Body and cover in aluminium alloy Galvanized steel bolts and screws Elastomer gasket
Degree of protection	IP 65
Standards:	IEC 60529
On request:	Other threads Coating Stainless steel screws

Box type	Code	Description
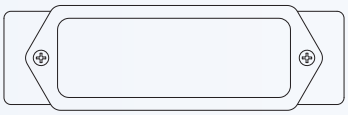	C	Enclosure with two coaxial hubs
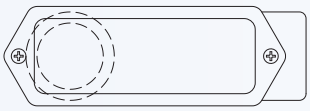	LB	Enclosure with two hubs arranged at 90° (One hub arranged on the bottom of the enclosure)
	LL	Enclosure with two hubs arranged at 90° (One hub arranged on the bottom left side)
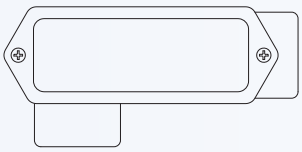	LR	Enclosure with two hubs arranged at 90° (One hub arranged on the right side)
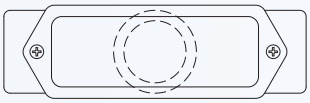	TB	Enclosure with three hubs, two coaxial and one at 90° arranged on the middle of the enclosure's bottom
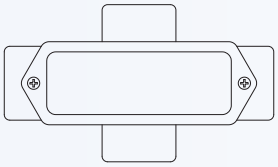	X	Enclosure with four cross hubs
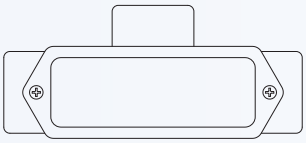	T	Enclosure with three hubs, two coaxial and one at 90° arranged on the side
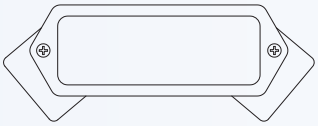	LU	Enclosure with two 45° hubs with respect to the axis

CORTEM GROUP®
ED.2021
vendite@elfit.com info@elfit.com
www.elfit.com

PULLING BOXES SELECTION CHART

Box type	Thread	Dimensions in mm			Weight
		Y	L	H	Kg
C17	1/2" ISO228/1	118	51	42	0,168
C27	3/4" ISO228/1	123	40	48	0,151
C37	1" ISO228/1	146	45	57	0,234
C47	1 ¼" ISO228/1	171	62	71	0,417
C57	1 ½" ISO228/1	171	62	71	0,372
C67	2" ISO228/1	204	76	83	0,514
C77	2 ½" ISO228/1	315	108	125	1,779
C87	3" ISO228/1	315	108	125	1,779
C107	4" ISO228/1	314	133	148	2,606

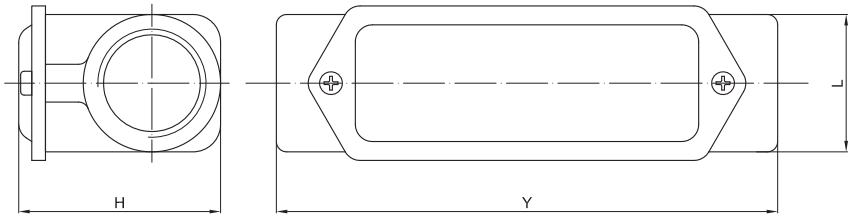

PULLING BOXES SELECTION CHART

Box type	Thread	Dimensions in mm			Weight
		Y	L	H	Kg
LB17	1/2" ISO228/1	117	40	65	0,172
LB27	3/4" ISO228/1	117	40	65	0,159
LB37	1" ISO228/1	137	45	78	0,236
LB47	1 ¼" ISO228/1	163	62	89	0,427
LB57	1 ½" ISO228/1	163	62	89	0,387
LB67	2" ISO228/1	190	76	108	0,541
LB77	2 ½" ISO228/1	238	107	150	2,121
LB87	3" ISO228/1	238	107	150	1,785
LB107	4" ISO228/1	300	133	185	2,658

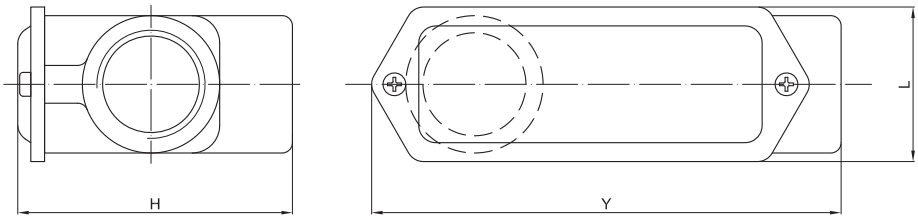

PULLING BOXES SELECTION CHART

Box type	Thread	Dimensions in mm			Weight
		Y	L	H	Kg
LL17	1/2" ISO228/1	117	51	48	0,171
LL27	3/4" ISO228/1	117	51	48	0,150
LL37	1" ISO228/1	137	61	57	0,238
LL47	1 ¼" ISO228/1	163	76	71	0,414
LL57	1 ½" ISO228/1	163	76	71	0,381
LL67	2" ISO228/1	190	94	83	0,522
LL77	2 ½" ISO228/1	238	138	122	2,084
LL87	3" ISO228/1	238	138	122	1,748
LL107	4" ISO228/1	300	162	148	2,666

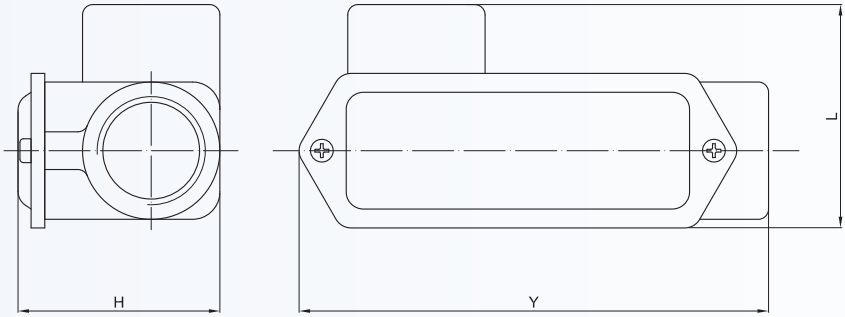

PULLING BOXES SELECTION CHART

Box type	Thread	Dimensions in mm			Weight
		Y	L	H	Kg
LR17	1/2" ISO228/1	117	51	48	0,171
LR27	3/4" ISO228/1	117	51	48	0,150
LR37	1" ISO228/1	137	61	57	0,238
LR47	1 ¼" ISO228/1	163	76	71	0,414
LR57	1 ½" ISO228/1	163	76	71	0,381
LR67	2" ISO228/1	190	94	83	0,522
LR77	2 ½" ISO228/1	238	138	122	2,084
LR87	3" ISO228/1	238	138	122	1,748
LR107	4" ISO228/1	300	162	148	2,666

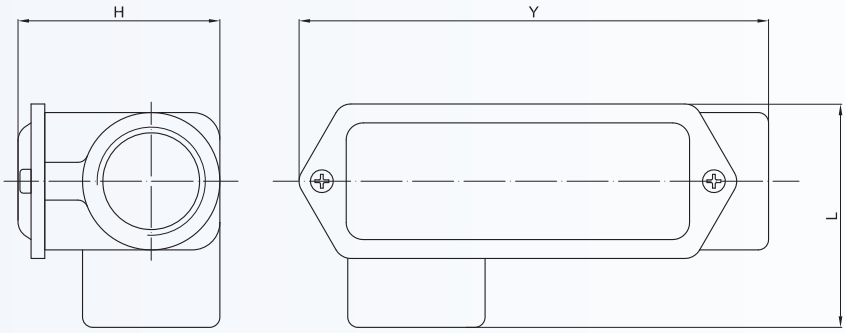

CORTEM GROUP®
ED.2021
vendite@elfit.com info@elfit.com
www.elfit.com

PULLING BOXES SELECTION CHART

Box type	Thread	Dimensions in mm			Weight
		Y	L	H	Kg
TB17	1/2" ISO228/1	123	40	65	0,193
TB27	3/4" ISO228/1	123	40	65	0,168
TB37	1" ISO228/1	146	45	78	0,254
TB47	1 ¼" ISO228/1	171	62	89	0,488
TB57	1 ½" ISO228/1	171	62	89	0,416
TB67	2" ISO228/1	204	76	108	0,607
TB77	2 ½" ISO228/1	315	108	163	2,492
TB87	3" ISO228/1	315	108	163	1,996
TB107	4" ISO228/1	314	133	185	2,747

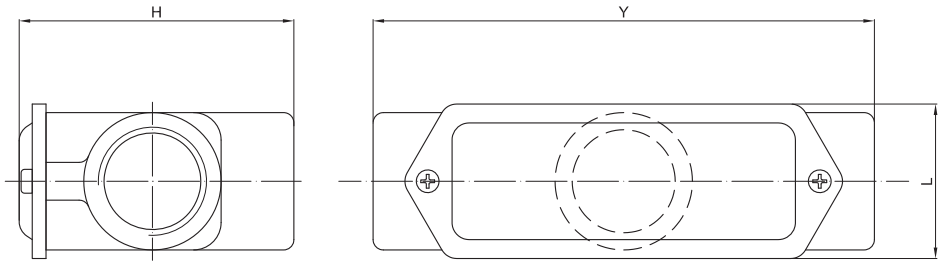

PULLING BOXES SELECTION CHART

Box type	Thread	Dimensions in mm			Weight
		Y	L	H	Kg
X17	1/2" ISO228/1	123	68	48	0,217
X27	3/4" ISO228/1	123	68	48	0,187
X37	1" ISO228/1	146	81	57	0,289
X47	1 ¼" ISO228/1	171	96	71	0,532
X57	1 ½" ISO228/1	171	96	71	0,428
X67	2" ISO228/1	204	118	83	0,623
X77	2 ½" ISO228/1	315	183	125	2,394
X87	3" ISO228/1	315	183	125	2,105
X107	4" ISO228/1	315	196	148	2,881

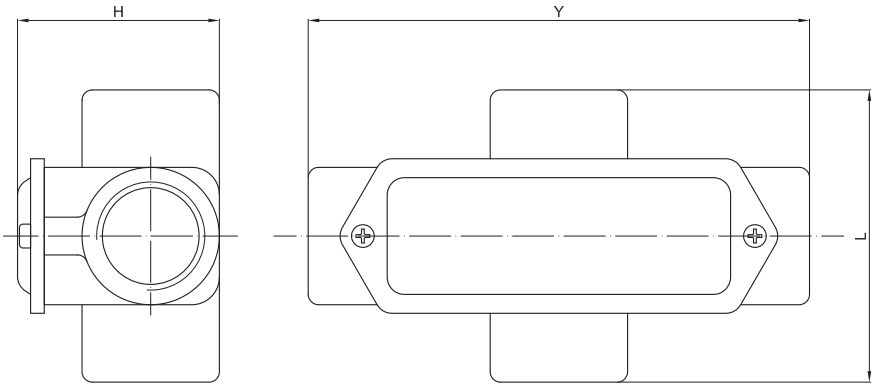

PULLING BOXES SELECTION CHART

Box type	Thread	Dimensions in mm			Weight
		Y	L	H	Kg
T17	1/2" ISO228/1	123	53	48	0,191
T27	3/4" ISO228/1	123	53	48	0,170
T37	1" ISO228/1	146	63	57	0,264
T47	1 ¼" ISO228/1	171	78	71	0,473
T57	1 ½" ISO228/1	171	78	71	0,410
T67	2" ISO228/1	204	96	83	0,560
T77	2 ½" ISO228/1	315	148	125	2,457
T87	3" ISO228/1	315	148	125	1,948
T107	4" ISO228/1	315	166	148	2,725

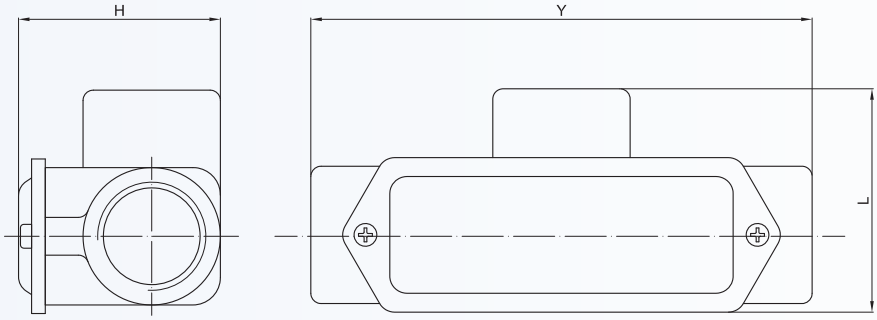

PULLING BOXES SELECTION CHART

Box type	Thread	Dimensions in mm			Weight
		Y	L	H	Kg
LU17	1/2" ISO228/1	130	64	44	0,185
LU27	3/4" ISO228/1	130	64	44	0,167
LU37	1" ISO228/1	148	73	50	0,217
LU47	1 ¼" ISO228/1	182	103	71	0,523
LU57	1 ½" ISO228/1	182	103	71	0,456
LU67	2" ISO228/1	211	118	83	0,639
LU77	2 ½" ISO228/1	310	156	115	2,498
LU87	3" ISO228/1	310	156	115	1,961

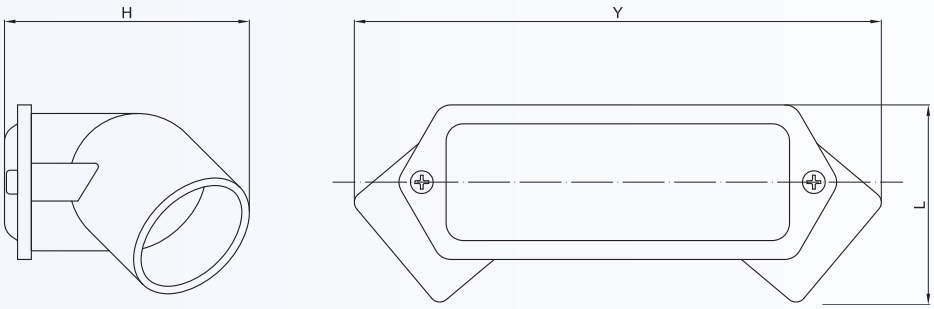

CORTEM GROUP®
ED.2021
vendite@elfit.com info@elfit.com
www.elfit.com